NEW HAMPSHIRE ELECTION PROCEDURE MANUAL: 2014-2015

PUBLISHED BY THE DEPARTMENT OF STATE

WILLIAM M. GARDNER
SECRETARY OF STATE

ROBERT P. AMBROSE
SENIOR DEPUTY SECRETARY OF STATE

DAVID M. SCANLAN
DEPUTY SECRETARY OF STATE

EPM - 2014 –2.3

INTRODUCTION BY THE SECRETARY OF STATE

Dear Election Official:

This Manual is designed to help you carry out the important job of conducting fair and impartial elections in your community. One cautionary note is needed. This handbook is not law. It is an attempt to make the election process more readily understandable. Every attempt has been made to keep the language and structure of this Manual as non-technical as possible. Any interpretation questions should still be directed to your local legal counsel or the Offices of the Secretary of State or the Attorney General.

The Manual is organized into sections, each corresponding to different phases of the election process. It includes the duties of various election officials and issues of special interest. While every official will benefit from studying the entire Manual, a review of the section dedicated to the office you hold will provide an overview of your election-related duties.

It is my hope that this Manual, used in conjunction with the NH Votes online training at http://nhvotes.sos.nh.gov and the Secretary of State's website at http://sos.nh.gov/ will provide a helpful guide to which you may refer as questions arise in the election process. As always, we stand ready to help you in any way we can.

Thanks for the hard work you do by sharing your time so New Hampshire's unique political traditions continue.

Sincerely,

William M. Gardner
Secretary of State

PREFACE AND ACKNOWLEDGEMENTS

This document is the Election Procedure Manual prepared by the Secretary of State with the advice and approval of the Attorney General pursuant to RSA 652:22. It should be used in combination with the Secretary of State's website at http://sos.nh.gov/ and NH Votes election law training, which is available at http://NHVotes.sos.nh.gov

This 2014 revision of the Election Procedures Manual reflects changes to the election laws made in 2013 and 2014. First, the election process is described from start to finish. Second, the duties of each election official are described. Detailed information is then provided on topics of special interest to local election officials. Finally, copies of forms, charts, polling place layouts, suggested procedures and sample notices are provided. There is an extensive index at the back of the Manual to assist readers in quickly locating answers to questions. The work done in the past by the volunteers from the New Hampshire City and Town Clerks' Association continues to serve as the foundation upon which this manual has been developed.

While this document reflects a concentrated effort by the Secretary of State's Office and the Attorney General's Office to summarize and organize the election laws, it is not a law book. The Election Procedures Manual is meant to be an authoritative reference resource and a learning tool; it is not a substitute for the statute book or for legal advice. Court decisions and changes to the statutes made between printings of the Manual may change the election laws. Whenever uncertainty exists as to what action should be taken, we will make our best effort to assist you and you should consult your local legal counsel.

The Attorney General's Office is charged with enforcing the election laws and serves the Secretary of State as legal counsel. In the event that the acts of a local government election official become the subject of a lawsuit, however, the legal counsel for that community will be defending the official and his or her community in court. If disagreement exists as to proper procedure, it is recommended that local election officials consult with the jurisdiction's local legal counsel before acting.

This Election Procedure Manual will be updated and republished every two years.

The Secretary of State and the Attorney General endeavor to provide effective assistance to local election officials. We thank you for your tireless efforts in conducting elections in your community. The validity and credibility of New Hampshire elections rely on your willingness to learn and properly execute the election laws. Voting is the most fundamental right in a democracy because it is through voting that citizens protect all other rights by carefully selecting the public servants who guide and direct our self-governance. You are the first and primary protectors of that most fundamental right, the right to cast a meaningful vote.

TABLE OF CONTENTS

INTRODUCTION BY THE SECRETARY OF STATE ..... **i**

PREFACE AND ACKNOWLEDGEMENTS ..... **iii**

TABLE OF CONTENTS ..... **v**

I. VOTER REGISTRATION **1**

ELECTIO*NET*, THE STATEWIDE VOTER REGISTRATION SYSTEM 1

TOWN AND CITY CLERKS TO ACCEPT APPLICATIONS 1

DATA ENTRY INTO ELECTIONET 1

SESSIONS OF SUPERVISORS 1

POSTING CHECKLISTS; NOTICES OF SESSIONS 3

DETERMINING AN APPLICANT'S QUALIFICATIONS 3

REGISTERING AT ANY ELECTION WITHOUT APPROVED PHOTO ID 5

REGISTERING BY COMPLETING A DOMICILE AFFIDAVIT 6

ABSENTEE VOTER REGISTRATION 8

FEDERAL OFFICE ONLY VOTERS (DOMICILED OUTSIDE THE U.S) 8

CHECKLIST CHANGES: REMOVAL OF NAMES 9

II. PREPARATION FOR ELECTION DAY **13**

FILING OF CANDIDATES 13

DECLARATION OF CANDIDACY 14

INCOMPATIBLE OFFICES 15

PRINTING OF ELECTION MATERIALS 17

DISTRIBUTION OF ABSENTEE BALLOTS 19

WHO IS ELIGIBLE 19

UNLAWFUL USE OF AN ABSENTEE BALLOT 20

APPLICATIONS DISTRIBUTED BY CLERKS 20

RECEIPT OF APPLICATION 21

CLERKS TO SEND OR DELIVER BALLOTS 22

RETURN OF MARKED BALLOTS: CUTOFF 22

LIST OF ABSENTEE VOTERS TO BE MAINTAINED BY CLERK 22

RECEIPT OF MARKED BALLOTS BY CLERK 23
DEATH OF AN ABSENTEE VOTER 23
FEDERAL "POST CARD" APPLICATION 23
SENDING ABSENTEE BALLOTS TO UOCAVA VOTERS 23
FURTHER PREPARATIONS 24
NOTICE OF VOTER IDENTIFICATION REQUIREMENTS 24
DISQUALIFICATION OR ABSENCE OF CERTAIN OFFICIALS 25
ADDITIONAL STAFF 26
EQUIPPING THE POLLING PLACE 26
BALLOT COUNTING DEVICES 26
POSTING OF WARRANT 27
CHOOSING THE SITE 27
PUBLIC NOTICE OF POLLING PLACE LOCATION AND HOURS 28
ADDITIONAL POLLING PLACES 28
INSPECTING BALLOT CONTAINERS 29
SECURITY AND TESTING OF BALLOT COUNTING DEVICES 29
III. ELECTION DAY 30
CONDUCTING THE POLLING OF VOTES 30
DATES OF ELECTIONS 30
TIME POLLS ARE TO BE OPEN 30
ROLE OF THE MODERATOR 31
SETTING UP THE POLLING AREA 31
READY FOR OPENING THE POLLS 31
PROCEDURE FOR ACCEPTING VOTERS 32
CHALLENGE OF A VOTER 36
CHECKLIST OF THINGS TO DO DURING ELECTION DAY 36
CLOSING THE POLLS 37
AFTER THE POLLS HAVE CLOSED 37
SET UP THE POLL FOR COUNTING 37
PROCESSING AND CASTING THE ABSENTEE BALLOTS 38
CHALLENGES TO ABSENTEE BALLOTS 39

COUNTING THE BALLOTS 40
DISQUALIFICATION OF ELECTION OFFICIALS IN COUNTING PROCESS 40
WHAT CONSTITUTES A LEGAL VOTE 41
COUNTING THE CHECKLIST 43
REPORTING THE VOTE – VOTES, VOTERS, & BALLOTS CAST 43
SECURING THE BALLOTS 44
IV. POST ELECTION DAY 45
CERTIFYING THE WINNERS 45
PRESERVATION OF CHECKLIST 45
PRESERVATION OF BALLOTS AND RELATED MATERIALS 45
V. TOWN ELECTIONS 46
OFFICIAL VS. UNOFFICIAL BALLOT SYSTEMS 46
FILING FOR OFFICE 46
ABSENTEE VOTING 47
POLLING HOURS 47
USE OF OFFICIAL BALLOTS 47
CHECKLIST FOR THE OFFICIAL BALLOT 48
VI. ELECTION OFFICIALS AND THEIR RESPONSIBILITIES 51
WHO IS AN ELECTION OFFICER? 51
SWEARING IN OF ELECTION OFFICIALS 52
VACANCIES IN ELECTION OFFICES 53
ABSENCES ON ELECTION DAY 56
INCOMPATIBILITY OF OFFICES 57
VII. DUTIES OF INSPECTORS OF ELECTION 59
VIII. DUTIES OF MODERATORS 60
PRE-ELECTION DAY 60
ELECTION DAY 60
BALLOT COUNTING DEVICES 63
ACCESSIBLE VOTING SYSTEM 63
OBSERVERS 65
CHALLENGES 65

ABSENTEE BALLOTS 66
CLOSING THE POLLS 69
DECLARING THE RESULTS 71
POST-ELECTION DAY 74
IX. DUTIES OF SUPERVISORS OF THE CHECKLIST 76
STANDARD OF PROOF 76
PROOF OF IDENTITY 77
PROOF OF DOMICILE 77
STUDENT VOTERS 82
UNIFORMED AND OVERSEAS CITIZENS (UOCAVA) 83
CHECKLIST CHANGES; REMOVAL OF NAMES 86
REMOVAL OF DECEASED VOTERS 87
POSTING CHECKLISTS 88
ELECTION DAY DUTIES –SUPERVISORS OF CHECKLIST 90
MEETING TO REMOVE DECEASED VOTERS 90
POST-ELECTION DAY DUTIES – BOARD OF SUPERVISORS 92
REMOVAL OF NAMES FROM THE CHECKLIST 93
X. DUTIES OF TOWN CLERKS 97
PRE-ELECTION DAY 97
EMAIL ADDRESS, STREET ADDRESS, POLLING HOURS & LOCATION 97
ACCEPTING APPLICATIONS FOR REGISTRATION AS A VOTER 97
NOTICE OF FILING PERIOD -STATE PRIMARY ELECTION 97
ABSENTEE BALLOT APPLICATIONS 98
RECEIPT OF APPLICATION AND VERIFICATION 98
LIST OF ABSENTEE VOTERS 99
RETURN OF MARKED BALLOTS 100
NURSING HOME ABSENTEE REGISTRATION & VOTING 101
ELECTION DAY DUTIES – TOWN CLERK 102
REPORTING THE RESULTS 103
POST ELECTION DUTIES – TOWN CLERK 104
RIGHT TO KNOW LAW – VOTER REGISTRATION RECORDS 104

TOWN ELECTIONS - TOWN CLERK DUTIES 106
XI. DUTIES OF SELECTMEN 110
RESPONSIBILITIES 110
APPOINTING INSPECTORS OF ELECTION 110
WARRANT ARTICLES 110
POLLING PLACE 110
ACCESSIBILITY OF THE POLLING PLACE AND THE VOTING PROCESS 113
ELECTION DAY DUTIES - SELECTMEN 113
ATTENDANCE 114
XII. ACCESSIBILITY 115
PARKING 115
ROUTE 116
CURBS 117
RAMPS 117
ENTRANCES 118
INTERIOR ROUTE 119
VOTING BOOTHS 119
XIII. CHALLENGES 123
WHO HAS THE RIGHT TO CHALLENGE A VOTER? 123
WHEN CAN CHALLENGES OCCUR? 123
CHALLENGERS AT THE POLLING PLACE 123
WHAT IS THE PROCEDURE IF A VOTER IS CHALLENGED? 124
XIV. ELECTIONEERING 126
XV. NEGLECT, WRONGFUL VOTING AND FRAUD 129
CRIMINAL CONSEQUENCES FOR MISCONDUCT 131
XVI. ABSENTEE VOTING 132
ABSENTEE - NOT REGISTERED TO VOTE NOTICE 132
NOTICE OF REQUIREMENTS TO USE ABSENTEE BALLOT 133
ABSENTEE REGISTRATION FORM – PERSONS WITH DISABILITIES 134
ABSENTEE VOTER REGISTRATION FORM – TEMPORARILY ABSENT 135
FEDERAL POST CARD APPLICATION (FPCA) 136

OFFICIAL FEDERAL WRITE-IN BALLOT 137
XVII. OATHS AND AFFIDAVITS 138
OATH OF OFFICE 138
INDIVIDUALS REQUIRING AND PROVIDING ASSISTANCE 139
VOTER REGISTRATION FORM - PAGE 2 140
QUALIFIED VOTER AFFIDAVIT 141
DOMICILE AFFIDAVIT 142
CHALLENGED VOTER AFFIDAVIT 143
ASSERTING A CHALLENGE 144
XVIII. ELECTION DAY FORMS, SUPPLIES, SEALS 146
ELECTION SUPPLIES - SAMPLE LIST 146
ELECTION FORMS AND DOCUMENTS CHECKLIST 147
ELECTRONIC BALLOT COUNTING DEVICE - TESTING & SECURITY 148
SEAL ON BOX CONTAINING BALLOTS 152
XIX. SIGNS AND MISCELLANEOUS 153
BALLOT CLERK PROCEDURE 160
COUNTING INSTRUCTIONS – MODEL 1 162
COUNTING INSTRUCTIONS – MODEL 2 166
ELECTION TALLY SHEET 169
MODERATOR'S WORKSHEET FOR THE 2014 GENERAL ELECTION 170
VOTES IN CONTESTS - EXAMINATION OF INDIVIDUAL RACES 172
RECOUNT PROCEDURES CHART 174
NEW VOTER AUTHORIZATION CARD 175
NOMINATION PAPER 176
UNDECLARED RE-REGISTRATION PRIMARY DAY 177
POLLING PLACE LAYOUT EXAMPLE 178
RETENTION AND PRESERVATION OF ELECTION MATERIAL 179
VOTER REGISTRATION AND VOTER CHECK-IN DOCUMENTS 180
INDEX 181
TABLE OF AUTHORITIES 184

I. VOTER REGISTRATION

The purpose of voter registration in New Hampshire is to allow qualified citizens the right to vote. Any person registering to vote shall be:

(a) At least 18 years of age on the day of the election;
(b) A United States citizen; and
(c) Domiciled in the town or city in which the applicant is registering to vote and not otherwise disqualified to vote.

A standard voter registration application form is required by statute and used throughout the state. RSA 654:7.

The checklist contains the name of every qualified voter who has registered in a given community. The checklist is prepared and maintained by the supervisors of the checklist or board of registrars in each town and city in the state. The board of supervisors or registrars is responsible for all additions or changes to the checklist.

The board in each town or city is composed of three members, each serving a 6-year term unless otherwise set by a city charter. Supervisors and registrars are elected at city and town elections every other year unless otherwise set by a city charter. RSA 41:46-a.

ELECTIO*NET*, THE STATEWIDE VOTER REGISTRATION SYSTEM

Federal law requires that registration records on all voters in the state be entered into a single statewide computerized voter registration system. All cities and towns are currently using a single system named Electio*Net*. Checklists for state-federal primaries and general elections and all municipal elections shall be produced from Electio*Net*. RSA 654:45.

TOWN AND CITY CLERKS TO ACCEPT APPLICATIONS

Town and city clerks are required to accept the applications of those people who wish to become registered voters. However, only the supervisors can make the final decision to add a name to the checklist. All applications received by the clerk should be forwarded to the supervisors for consideration at the supervisors' next meeting. RSA 654:8; RSA 654:9.

DATA ENTRY INTO ELECTIO*NET*

Upon receipt of new voter registrations, supervisors of the checklist should ensure that information on new registrants is entered into Electio*Net* in a timely manner. The checklist data in Electio*Net* must be updated no later than the session of the Supervisors of the Checklist required 10 days before any election and again as soon as practical after each election. RSA 654:12; RSA 659:13.

SESSIONS OF SUPERVISORS

Election Day Registration - Any person may register to vote with the supervisors of the checklist at any **election** (i.e., primary and general elections, town, city, school district and village district elections, including village district meetings where officials are elected without use of an official ballot). Applicants must meet all the qualifications required by RSA 654:12, as judged by the supervisors. RSA 654:7-a.

For the purposes of this section "election" refers to any voting at which absentee ballots are provided. "Meeting" refers to the deliberative session of the town, school, or village district.

State Elections - The supervisors are required to hold one session prior to any state election (state primary, presidential primary, or general election). The session must be held on the Saturday 10 days before the election. This session must be held as a minimum requirement between 11 a.m. and 11:30 a.m. and may be extended for additional hours at the discretion of the supervisors. Except for the provisions relative to election day registration, no additions or corrections may be made to the checklist after that session is over. RSA 654:28.

Holiday Weekend - If the session of the supervisors which is to be held on the Saturday 10 days before the election falls on a holiday weekend (i.e. Labor Day), then the supervisors must hold that session on the Tuesday 7 days before the election between 7:00 p.m. and 7:30 p.m. and may be extended for additional hours at the discretion of the supervisors. RSA 654:27; RSA 654:28.

Primary Elections - In addition to election day registration and the session required above, the supervisors must also hold one session for additions and corrections to the checklist prior to the start of the filing period for state offices or the presidential primary. Before the presidential primary, the session shall be on the Friday preceding the first day of the filing period between 7:00 p.m. and 7:30 p.m. The Secretary of State determines and will announce the dates of the filing period for the Presidential Primary. RSA 655:47, II. Before the state primary election, the session must be on the Tuesday before the first Wednesday in June (that is, the day before the filing period opens) between 7:00 p.m. and 7:30 p.m. At any session the supervisors may extend the session to end at a later time. RSA 654:32.

Local Elections - For all town, city, village district and school district elections, supervisors must hold a session on the Saturday 10 days prior to the election and on the day immediately prior to the first day of the filing period. In towns operating under RSA 40:13, known as the SB2 form of annual meeting, the supervisors' session shall be held on the Saturday 6 - 13 days prior to the deliberative session. Supervisors must register voters on election day of local elections. RSA 669:5; RSA 44:5; RSA 670:3.

NO RESTRICTIONS ON OTHER MEETINGS

Supervisors should hold as many meetings as necessary to allow citizens in the community an opportunity to register or change party affiliation. In addition to the required sessions, supervisors may meet at any time prior to the final pre-election session required by law, as long as they post and publish notice of the meeting. RSA 654:27; RSA 654:32. No additions, removals, or corrections to the checklist shall be made between the Saturday session (or the Tuesday session if Saturday falls on a holiday weekend) and election day. RSA 654:28. Qualified individuals may register on election day.

Supervisors should meet and resolve pending additions and pending removals – which appear in System Reminders of Electio*Net*.

POSTING CHECKLISTS; NOTICES OF SESSIONS

No later than the fourth Tuesday before any state election, the supervisors shall post a current checklist at the town or city clerk's office or at town hall. At least 10 days prior to a session for alteration of party affiliation before a primary, the supervisors shall post a current checklist showing party affiliations at the town or city clerk's office or at town hall. Each posted checklist shall state the date, hour and place of the upcoming session(s) for checklist additions or corrections. Notice of any upcoming session must also be published in a newspaper of general circulation in the town or city at least 7 days prior to the session. Reconvening of a recessed session does not require the publication of additional notice. RSA 654:26; RSA 654:27; RSA 654:33.

Supervisors may meet at other times to conduct regular maintenance of the checklist. Supervisors must provide notice of meetings at which voters will be officially added to or removed from the checklist. Work by one or more supervisors or their staff to enter new applicants into pending status, scan election history, or to otherwise perform Electio*Net* maintenance which does not officially change any voter's status need not be noticed.

Notice of meetings where voters will be added to or removed from the checklist which are in addition to those required by statute as described above, should be made seven days prior to the session, but in no circumstance less than 24 hours before the meeting in a manner consistent with the Right-to-Know law, with at least two notices. RSA 91-A. For example, one notice might be placed on the town hall bulletin board, and another might be placed on the town's web site.

CERTIFICATION AND CORRECTION OF POSTED CHECKLIST

On each posted checklist, the supervisors shall subscribe the following oath: "We, the supervisors of the checklist of the town (or ward) of _____ do solemnly swear that, according to our best knowledge, the within list contains ____ (number) names of those persons only who are, by actual domicile, legal voters in said town (or ward)." RSA 654:29.

Except for the additions and corrections made on election days, any additions or corrections shall be made to the previously posted checklist on or before midnight on the succeeding Friday either by additions or corrections to said checklist or by posting a new corrected checklist. Notice of such additions or corrections to the checklist shall also be given to the town or city clerk. RSA 654:28.

THE REGISTRATION FORM

Each person desiring to register to vote must fill out a standard Voter Registration Form. Supervisors should make certain that they have a sufficient supply of these forms for themselves and the town or city clerk. Information regarding the printing of these forms may be obtained through the Secretary of State's Office. RSA 654:7.

DETERMINING AN APPLICANT'S QUALIFICATIONS

When the applicant has completed the Voter Registration Form, the clerk or the supervisors must determine whether the applicant is legally qualified to vote in the community. RSA 654:12.

a. IDENTITY. A person must prove his or her identity to establish that the

evidence used to prove age, citizenship, and domicile relate to the applicant.

b. AGE: A person must be 18 years of age (a person may register to vote when he or she is age 17, as long as they will be 18 years old by the day of the next election).

c. CITIZENSHIP: A person must be a citizen of the United States. Naturalization papers may be requested of a naturalized citizen. If Naturalization papers are not available, the person may complete a Qualified Voter Affidavit.

d. DOMICILE: A person must have a domicile in the town or ward in which he or she seeks to register. Supervisors may require proof of domicile in the form of an affidavit declaring that the applicant has a domicile in the town or ward in which he or she desires to vote.

Students attending institutions of learning in the state may claim domicile for voting purposes in the town or city they live in while attending the school if they otherwise meet the domicile requirements. RSA 654:1I-a. Refer to "Voting as a College Student" on Secretary of State's website http://sos.nh.gov/CollegeStudent.aspx.

The determination of an applicant's qualifications to vote is a judgment which the supervisors must make. An applicant must be placed on the checklist unless a majority of the supervisors agree that it is more likely than not that the applicant is not qualified. The Secretary of State will be happy to clarify what these qualifications are, but cannot judge for the supervisors which applicants should or should not be registered.

The applicant must prove his or her identity during the application process. If a person has any one of the following in his or her immediate possession, he or she must present it when applying for registration:

(1) Photo driver's license issued by any state or the federal government
(2) United States passport, armed services identification, or other photo identification issued by the United States government.
(3) Photo identification issued by local or state government.

These forms of identification are considered presumptive evidence of the identity of an applicant. RSA 654:12,II(b) The supervisors of the checklist may approve other forms of photo ID that they deem to be reasonable. RSA 654:12, II, III

A chart on page 180 summarizes the types of documentation authorized for voter registration and election day check-in.

A person who does not have one of the approved photo identifications described above may establish identity through the completion of a Qualified Voter Affidavit. RSA 654:12.

If an applicant is unable to provide the proof of qualifications as required in RSA 654:12, he or she may register by completing the necessary affidavits, pursuant to RSA 654:12, and completing the voter registration form. RSA 654:7.

NURSING HOME RESIDENTS

Residents of a nursing home or similar facility who no longer possess the usual forms of identification, may prove their identity through verification of their identity by the administrator of the facility or his or her designee. If an applicant for voter registration proves his or her identity by having it verified by a

nursing home administrator, that registration will be treated in the same manner as would a registration where the applicant proved his or her identity with a qualified photo identification. RSA 654:12.

REGISTERING AT ANY ELECTION WITHOUT APPROVED PHOTO ID

When a person who has never been registered to vote in New Hampshire registers to vote on any election day and is unable to provide:

(1) Photo driver's license issued by any state or the federal government;
(2) United States passport, armed services identification, or other photo identification issued by the United States government;
(3) Photo identification issued by local or state government; or
(4) Photo identification deemed reasonable by the supervisors of the checklist,

he or she may establish identity through the completion of a Qualified Voter Affidavit. RSA 654:12. See chart on page 180.

For an individual who successfully proves his or her identity by completing a Qualified Voter Affidavit, the election official shall inform the person that he or she will receive an identity verification letter. The Secretary of State will perform a verification of identity for that person following the election. It is, therefore, necessary for the election official receiving the application to note on the Voter Registration Form that the person registered by completing a Qualified Voter Affidavit to establish identity. When the registration is entered into Electio*Net,* if the person is not already in the system as previously registered elsewhere in New Hampshire, or if the town or ward of previous registration claimed on the Voter Registration Form does not match the Electio*Net* record, the registration form must be marked to document that a Qualified Voter Affidavit was used to prove identity.

Within the time frame set forth in RSA 654:12,V(b), the Secretary of State will send a letter to each voter who is new to New Hampshire and who registered on election day by completing a Qualified Voter Affidavit or by completing Page 2 of the Voter Registration Form in a General Election to establish identity. In the letter, the voter will be welcomed as a new voter, but will be instructed (a) to return written confirmation within 45 days that the person registered and voted, or (b), if not, to immediately notify the Attorney General if the person did not register and vote on election day. RSA 654:12, V(a) and V(b)

If the identify verification letter is returned as undeliverable by the United States Postal Service, the Attorney General will be notified. If any person reports that someone else used his or her name to register to vote or if mail to a new voter is undeliverable at the address given on the Voter Registration Form, the law requires the Attorney General to investigate whether voting fraud occurred. RSA 654:12, V(c).

The law requires the Attorney General to investigate, pursuant to a list provided by the Secretary of State, all persons who were mailed a letter and have not confirmed their registration. RSA 654:12, V(c).

REGISTERING BY COMPLETING A DOMICILE AFFIDAVIT

Whenever a person registers to vote and completes a Domicile Affidavit in order to establish the domicile qualification, the registration form must be marked to document that a Domicile Affidavit was used to prove domicile. When the election official enters the information into Electio*Net*, he or she must show that a Domicile Affidavit was completed.

Within 90 days of each election, the Secretary of State shall forward a list of persons executing Domicile Affidavits since the prior election to both the Attorney General and the Division of Motor Vehicles. Within the time frame set forth in RSA 654:12,V(d), the Secretary of State will send each such person a letter informing him or her of a driver's obligation to obtain a New Hampshire driver's license within 60 days of becoming a New Hampshire resident. Any letters that are returned as undeliverable will be referred to the Attorney General for investigation. RSA 654:12,V(e).

IN-STATE TRANSFER OF VOTER REGISTRATION

If Electio*Net* is in use when a person is registering and the election official can determine that the person applying for registration as a voter is currently registered as a voter in another New Hampshire town or ward, the applicant does not have to re-prove age or citizenship. The applicant should still complete a Voter Registration Form and prove his or her identity and domicile. Because the voter already proved his or her age and citizenship when he or she registered to vote in the other town or ward, the law now does not require that the voter prove those qualifications a second time. This law is intended to make the voter registration process quicker and easier for both the voter and the election official. This waiver of the requirement for proof of age and citizenship applies only when the election official is able to check Electio*Net* as the person is registering. RSA 654:12, IV.

Supervisors should require an applicant to prove citizenship by presenting any one of the following:

- Birth certificate
- United States Passport
- Naturalization papers
- Qualified voter affidavit, or
- Any other reasonable document establishing that the applicant is a United States citizen.

Submission by the applicant of any one of the above documents is sufficient for compliance with this section and no further document can be required by the supervisors in this category. RSA 654:12.

The Qualified Voter Affidavit must in the form shown on page 141.

The supervisors may also request any reasonable documentation which establishes that the applicant will be 18 years of age or older by election day and any reasonable documentation which indicates that the applicant has a domicile in the town, city or ward in which he desires to vote, ***or an affidavit*** declaring that the applicant has a domicile in the town, city or ward in which he desires to vote. RSA 654:12. The Domicile Affidavit must be in the form shown on page 142.

The determination of a person's domicile is a question of fact. Based on the available evidence, is it more likely than not that the person has established a physical presence at the place claimed as

domicile? If yes, it is more likely than not that the person has manifested an intent to maintain at that one place, more than any other place, a continuous presence for domestic, social, and civil purposes relevant to participating in democratic self government. If yes, the person has satisfactorily proven his or her domicile for voting purposes. A voter's intention to reside and his or her actual physical presence must coincide. The mere fact that someone intends to make a town his domicile is insufficient. The person must actually have a physical presence there. A person can have only one domicile for voting purposes. A person's claim of domicile for voting purposes is not conclusive of the person's residence for any other legal purpose. RSA 654:1.

Domicile is discussed further starting at page 77.

DECISION TO BE MADE BY THE SUPERVISORS OF THE CHECKLIST

The clerk should provide any completed voter registration forms to the supervisors prior to the supervisors' next session. The supervisors should issue written guidelines to the clerk describing what evidence the supervisors accept as proof of identity, citizenship, age, or domicile. It is up to a majority vote of the supervisors to make the final determination of whether to add the applicant's name to the checklist. RSA 654:11.

The supervisors should consider any applications received from the clerk at the first meeting held after the applications are received. If they vote by majority that an applicant is qualified, they should add his or her name to the checklist. The original copy of the form and any affidavits used should be retained by the supervisors for their records. A copy should be mailed to the supervisors of the checklist, in care of the town or city clerk, of the city or town of the applicant's last voting address if that address is in the state of Vermont, Maine, Massachusetts, Connecticut or Rhode Island. RSA 654:11; RSA 654:3.

If the applicant is deemed not to be qualified as a voter, the supervisors must inform him or her in writing within 7 days of their decision, stating the reason for the denial. The supervisors shall write the word "rejected" and the date of the rejection on the form and preserve it. RSA 654:13; RSA 654:23. Record this fact in Electio*Net* if the voter has already been entered in Electio*Net*.

The supervisors should be aware that any citizen may appeal the supervisors' denial to the New Hampshire Superior Court. RSA 654:42.

VOTER REGISTRATION FORM INFORMATION

The Voter Registration Form serves as the basis of a data file of registered voters in the town or ward. This file is, in part, a public record. However, public information includes only the voter's name, Electio*Net* ID number, physical street address, mailing address, town or city name, party affiliation, if any, the voter history, and for primary elections, in which party's primary the person voted. RSA 654:25; RSA 654:31; RSA 654:31-a, RSA 659:102. The remaining information on the Voter Registration Form is not subject to the Right-To-Know law, RSA 91-A. This information may be disclosed by election officials if disclosure is necessary to resolve a challenge to the voter. RSA 654:31-a. Otherwise, it is a misdemeanor to disclose non-public information from a voter's registration record. RSA 654:31.

ABSENTEE VOTER REGISTRATION

Any person who is legally qualified to vote in a town or city except that his name does not appear on the checklist, who is unable to attend a session of the supervisors or to submit a registration to the town or city clerk by reason of having a physical disability, religious practice or because he or she is temporarily absent, may register to vote using a special Absentee Voter Registration Form. RSA 654:16.

New Hampshire is exempt from the federal "Motor Voter" law, so if a federal motor voter postcard registration form is received from someone who is absent from town, or disabled, the clerk or the supervisors should send the applicant the New Hampshire Absentee Voter Registration Form as well as the standard Voter Registration Form. If the applicant is not absent from town, prohibited by religious practice from registering in person or is not disabled, he or she can be notified to come to the clerk's office or a session of the supervisors to register in person.

Absentee Voter Registration Forms may be sent out by the town or city clerk to anyone who requests them. When sending the form, the clerk must be sure to include a Voter Registration Form as well. Completed applications are returned to the clerk who should turn them over to the supervisors of the checklist. RSA 654:17, RSA 654:18, RSA 654:19. Information about voters who have a valid protective order or who are participants in the address confidentiality program is exempt from public disclosure requirements. RSA 173-B:4, RSA 7:46.

FEDERAL OFFICE ONLY VOTERS (DOMICILED OUTSIDE THE U.S)

A Federal Ballot Only Voter is neither a regular absentee voter nor a military voter (uniformed services voter) who is simply overseas. A Federal Office Only Voter is a person living outside the United States who no longer maintains a domicile in New Hampshire, but whose last domicile before leaving the United States was in New Hampshire. RSA 654:3.

A Federal Post Card Application (FPCA) form (or the link) may be downloaded from the Federal Voting Assistance Program http://www.fvap.gov and sent to voters who identify themselves as "a U.S. Citizen residing outside the U.S., and I do not intend to return" on the current FPCA form. (See FPCA example on page 136.) A standard Voter Registration Form should not be sent to avoid confusing the voter with other fully qualified (legally domiciled) voters. Clerks keep a copy and provide the original to the supervisors. **Once registered, a Federal Office Only Voter is eligible to vote for federal offices only.** A Federal Office Only (FOO) absentee ballot is prepared by the Secretary of State and supplied to clerks for these voters for the state primary and general elections. RSA 654:20; RSA 654:21; RSA 654:22; RSA 654:23.

ABSENTEE WRITE-IN BALLOT

An absent uniformed services voter, an absent voter temporarily residing outside the U.S., or a voter domiciled outside the U.S. who is unable to vote in person due to requirements of military service or due to living in isolated areas outside the United States, may apply for a write-in absentee ballot from the clerk, which will be prepared by the Secretary of State. There are write-in ballots available for

the primary and general elections. RSA 657:10-a.

An absent uniformed services voter, an absent voter temporarily residing outside the U.S., or a voter domiciled outside the U.S. may obtain an Official Federal Write-in Absentee Ballot (FWAB) from the U.S. Department of Defense (FVAP) website at http://www.fvap.gov/

These FWABs should be accepted by moderators and clerks as official ballots, so long as there is a signature on a voter registration document that matches the original signature on the affidavit. See sample of the Federal Write-in Absentee Ballot (FWAB) at page 23. RSA 657:10-b; RSA 657:23.

VOTER REGISTRATION RECORDS

The following is required by law to be maintained by the supervisors until the voter is removed from the checklist plus 7 years:

- Completed voter registration form
- Party change form
- Same day return to undeclared form and report
- Absentee ballot voter application form (FPCA)
- Overseas absentee registration affidavit
- Absentee ballot affidavit envelope for federal post card applicants not previously on the checklist
- Notice of removal
- Report of death
- Report of transfer
- Undeliverable mail or change of address notice
- Qualified voter and Domicile Affidavits

RSA 654:25; RSA 654:31-a; RSA 33-A:3-a

If a voter presents a valid protective order pursuant to RSA 173-B:4, or is a participant in the address confidentiality program established by RSA 7:46 and requests that no address be maintained on the checklist, the supervisors should mark the public checklist with an entry "Non-Public Voter" followed by a sequential number, i.e. 1 for the first such voter, 2 for the second and so on. The Supervisors must then maintain a separate non-public checklist of these voters. That non-public checklist should have the usual checklist information, but must not be disclosed to anyone other than the clerk and the moderator, except as otherwise provided by law. Electio*Net* has provisions for marking voters non-public (confidential). Clerks must send any qualified non-public (confidential) voter an absentee ballot upon receipt of a written request.

If a voter or a person in the household of the voter is a victim of certain crimes and does not wish to have his or her name or address appear on the checklist, he or she may apply to participate in a confidentiality program through the Attorney General's Office. RSA 7:46.

More information on this program may be obtained by contacting the Attorney General's Office Victim Assistance Program at 1-800-300-4500.

CHECKLIST CHANGES: REMOVAL OF NAMES

Only those persons legally qualified to vote should have their names maintained on a town or city checklist. Inaccurate checklists which list the name of a person who has moved from town, died, become an incarcerated felon, or who has otherwise become ineligible to vote

make it easier to commit voting fraud. While there is evidence of this occurring rarely in New Hampshire in the recent past, historically in the United States one common form of voting fraud is the use of the name of a dead or absent person, whose name is still listed on the checklist, by a person who is not qualified to vote. The public confidence in New Hampshire's election system may be diminished when a voter reviews the checklist, and finds the names of people who the voter knows are no longer alive or no longer qualified to vote. Provided supervisors keep their checklists current by fully utilizing Electio*Net*, public confidence in the state's voting system will benefit from these changes in our law and procedures.

The supervisors should remove the name of any person who relinquishes his U.S. citizenship or domicile in the community. A domicile for voting purposes is not lost because a voter is temporarily absent from his home. As long as a voter has a domicile in the town or city, intends to return to that domicile as his home, and does not establish another domicile for voting purposes in another community, that voter's name should remain on the checklist. RSA 654:2.

At least 30 days before removing the name of a voter from the checklist, the supervisors must first send written notice of removal by mail to the voter's last known address. The notice must state the reason considered for removing the name and the time and place where the voter may respond. RSA 654:44. Notice of removal letters can be found in and printed from Electio*Net*.

Upon receipt of a report of transfer or a notice in System Reminders of Electio*Net* that indicates that a voter has registered to vote in another community, or has permanently moved from the town or ward where registered, the supervisors, unless they have evidence that the notice is more likely than not in error, shall remove that voter's name from the checklist by approving the removal in System Reminders. A clerk who receives a notice of death must report that fact to the supervisors who shall remove the voter's name from the checklist. See page 87 for further details.

Supervisors shall also either remove a person's name from the checklist or send the person a 30 day notice letter if notice is received from the United States Postal Service, the Department of Safety, or through Electio*Net* that the person has permanently moved from the town or ward where he or she is registered to vote. RSA 654:36-b.

Mail sent to a voter at the mailing address the voter last provided which is returned by the United States Post Office indicating that the person has moved should trigger removal of the person's name from the checklist. If the supervisors have reason to believe the notice is in error, then a 30 day letter should be sent to the voter before removal of the voter's name from the checklist. RSA 654:36-b.

A "notice of removal" should not be sent to the voter's last known address when removing the name of a voter for whom a report of transfer or official notice of death has been received. Electio*Net* will preserve a record of all electronic notices. Supervisors should record all paper notices they receive or send so that they may justify their actions in the future, if necessary. RSA 654:36; RSA 654:37; RSA 654:44.

A registered voter may change his or her party affiliation any time the supervisors are in session, except between the first day of the filing period for a state

primary or presidential primary up to the day of the primary election. When a voter moves from one New Hampshire town to another, the voter is treated as a new registrant for this purpose and may choose any party affiliation, regardless of the voter's party affiliation where the voter was previously registered.

The supervisors must hold at least one meeting prior to the filing period for the change of party affiliation by registered voters. RSA 654:32.

All city and town clerks are authorized by law to accept changes in party affiliation.

An unaffiliated voter may declare his or her affiliation at the primary and may vote the ballot of his new party. A voter who has declared an affiliation with a party prior to primary day may only vote in that party's primary. The voter can change parties on primary day, but then is <u>not</u> allowed to vote at all in that primary.

An unaffiliated voter may declare his affiliation at the primary and vote the ballot of his new party AND THEN, after voting, may fill out a card available from the supervisors or sign his or her name on a list of voters prepared for the purpose of recording party changes, to change his or her party status back to unaffiliated. See examples of these forms on page 177.

Any person who is a registered member of a party and votes a ballot of that party at a primary election SHALL NOT fill out a card to change his or her party status to unaffiliated on primary election day. RSA 654:34 III & V.

CHECKLIST CHANGES: CHANGE OF ADDRESS WITHIN TOWN OR WARD

Supervisors must enter a change of address in Electio*Net* if they: (a) observe an address change on the marked checklist from an election, (b) receive evidence from the U.S. Postal Service, or (c) obtain appropriate documentation indicating that a person has moved within his or her town or ward, or that the street name or number has been changed for a voter that has not moved.

PHYSICAL (DOMICILE) ADDRESS FOR EACH VOTER

Supervisors shall ensure that each voter has a domicile address that represents a real location consistent with a recognized addressing formula within the town or ward of the person's domicile. If there is no physical address, the physical street name should correspond to a recognized legal exemption from the physical address requirement. See Frequently Asked Questions found in Electio*Net*/Help/Instructions.

REMOVAL OF DUPLICATE RECORDS

Supervisors are obligated to address duplicate voter records – records that appear in more than one New Hampshire town or city – in a timely manner. Supervisors should use the Inquiry function in Electio*Net* when registering new voters, thereby avoiding creation of duplicates.

Once a duplicate record has been identified, supervisors of the checklist or their designees should contact the city or town election officials where the duplicate voter appears, decide whether the same voter is named on both checklists, and resolve which list the voter should remain on or which town/city the voter was last registered in.

CAMPAIGNING

Political advertising used in any election, including local elections, must bear the name and address of some person responsible for the advertising. RSA 664: 1; RSA 664:14. The courts have held that a communication is political advertising only if it explicitly advocates the success or defeat of any party, measure, or person at any election. RSA 664:17 controls the placement of political advertising (signs).

Under RSA 664:17, political advertising cannot be placed on or affixed to any public property, including highway rights of way. Nor may political advertising be placed on or affixed to private property without the owner's consent.

This law allows signs to be placed within a State-owned right-of-way, but only if the owner of the underlying land gives the person erecting the sign permission and as long as the sign does not obstruct the safe flow of traffic. The law prohibits removing signs from private property, even unlawfully placed signs, except by the owner or someone authorized by the owner of the property. The law also prohibits removing signs from public property, even unlawfully placed signs, except by law enforcement or state, town, or city maintenance personnel. When public employees remove signs prior to election day, the signs must be kept for one week at a place designated by the municipality so that the candidate may retrieve the signs. RSA 664:17.

II. PREPARATION FOR ELECTION DAY

FILING OF CANDIDATES

There are separate procedures to be followed by candidates and election officials for filing for office in state elections. Each of these procedures is detailed as follows:

FOR PRESIDENTIAL PRIMARY

All inquiries regarding filing for the presidential primary should be directed to the Secretary of State.

FOR STATE PRIMARY ELECTION

Before the opening of the filing period for a state primary election, the Secretary of State will send the "Notice to Voters of State Primary Election" to all city and town clerks. City clerks are to forward these notices to ward clerks. Within 10 days of his or her receipt of this notice, the town or ward clerk shall fill in the information and post the notices in two public places within the town or ward. This notice serves as the warrant for the state primary election. RSA 655:11; RSA 655:12.

QUALIFICATIONS FOR STATE REPRESENTATIVES

Since candidates for state representative must file with the town or city clerk, the clerks should be aware of the qualifications of this office. Following are the constitutional and statutory requirements for state representative:

Part 2, Article 14, New Hampshire Constitution

Every member of the house of representatives shall be chosen by ballot; and, for two years, at least, next preceding his election shall have been an inhabitant of this state; shall be, at the time of his election, an inhabitant of the town, ward, place or district he may be chosen to represent and shall cease to represent such town, ward, place, or district immediately on his ceasing to be qualified as aforesaid.

RSA 655:8 further provides that "to hold the office of state representative, a person must be at least 18 years of age and must be qualified as provided in Part 2, Article 14 of the state constitution."

VOTER, OFFICE HOLDER

Every inhabitant of the state, having a single established domicile for voting purposes, being a citizen of the United States, of the age provided for in Article 11 of Part First of the Constitution of New Hampshire, shall have a right at any meeting or election, to vote in the town, ward, or unincorporated place in which he or she is domiciled. An inhabitant's domicile for voting purposes is that one place where a person, more than any other place, has established a physical presence and manifests an intent to maintain a single continuous presence for domestic, social, and civil purposes relevant to participating in democratic self-government. A person has the right to change domicile at any time, however a mere intention to change domicile in the future does not, of itself, terminate an established domicile before the person actually moves. RSA 654:1

I. Any elected or appointed official for whom one of the qualifications for his or her position is eligibility to be a voter in the area represented or served shall be considered to have resigned if the official moves his or her domicile so that he or she can no longer qualify to be a voter in the area represented or served. Any vacancy so created shall be filled as prescribed by law.

TEMPORARY ABSENCE

A domicile for voting purposes acquired by any person in any town shall not be interrupted or lost by a temporary absence therefrom with the intention of returning thereto as his or her domicile. Domicile for the purpose of voting as defined in RSA 654:1, once existing, continues to exist until another such domicile is gained. Domicile for purposes of voting is a question of fact and intention. A voter can have only one domicile for these purposes. No person shall be deemed to have lost a domicile by reason of his or her presence or absence while employed in the service of the United States; nor while engaged in the navigation of the waters of the United States or of the high seas; nor while a teacher in or student of any seminary of learning; nor while confined in any public prison or other penal institution; nor while a patient or confined for any reason in any nursing, convalescent home or hospital, old folks or old age home, or like institution or private facility. RSA 654:2

DECLARATION OF CANDIDACY

Prior to the opening of the filing period for a state primary, the Secretary of State will provide each town and city clerk with a supply of Declaration of Candidacy forms. The Declaration of Candidacy form is established by statute. The name of a person declaring candidacy will be printed on the official primary ballot of the party in which he or she is registered. RSA 655:17. Only candidates for state representative or delegate to the Republican state convention file the form with the town or city clerk. RSA 655:15. All other candidates file with the secretary of state.

The person signing the declaration of candidacy must be a registered voter in the town or ward where they are filing and a member of the party for which they are filing. It is the responsibility of the clerk to check Electio*Net* and ensure these requirements are satisfied. Political organization candidates, sometime called third party candidates, for State Representative file with the Secretary of State.

In single-town representative districts, candidates file with the town clerk of that town. In districts composed of more than one town, the candidate files with the town clerk in the community in which the candidate is domiciled.

Candidates for state representative must complete every portion of the declaration of candidacy, including the affidavit of qualification, the financial disclosure and the statement declaring whether the candidate will agree to limit campaign spending or not. RSA 655:14; RSA 655:15; RSA 655:17.

Candidates who file for state representative are also acknowledging that, if they are elected, they will serve as a delegate to the county convention. RSA 655:29.

Declarations of candidacy, primary petitions, and assents to candidacy must be mailed by the town or city clerk to the Secretary of State on the same day they are filed. RSA 655:18; RSA 655:27.

Except for those who must file with the town or city clerk, any person who files on the last day of the filing period must do so in person before the Secretary of State. RSA 655:16.

Delegates to the Republican state convention are elected at the state primary election. The number of delegates to be chosen from each town or city is set forth in RSA 662:6.

Candidates for delegate are not required to pay any fee or file any petitions. RSA 653:6. They must be registered members of the Republican Party and must be domiciled in the town or city they are to represent. If the person elected delegate is entitled to serve as a delegate because he or she has been nominated for office, the next highest eligible vote-getter shall be elected to that delegate seat. RSA 653:6.

Currently the Democratic Party does not elect delegates. Anyone wishing to attend the Democratic State Convention should contact the Democratic State Committee. Names of those wishing to be delegates to the Democratic State Convention do not appear on the primary ballot.

PRIMARY PETITIONS

Each primary petition may contain the name of only one candidate and bear the signature of only one voter. The oath of the voter upon the petition is sufficient evidence that he is a member of the party stated. No voter shall sign conflicting party petitions, nor shall he sign more than one primary petition for the same office unless more than one nomination is to be made, in which case he may sign as many primary petitions as there are nominations of his party to be made for the same office. If a voter has signed two or more conflicting primary petitions, all such petitions shall be rejected. RSA 655:21, RSA 655:23, RSA 655:24.

An Assent to Candidacy/Declaration of Candidacy completed by the candidate must accompany any primary petitions filed. The candidate must complete every portion of the form, including the affidavit of qualification, the financial disclosure and the statement declaring whether the candidate will agree to limit campaign spending or not. RSA 655:25; RSA 664:5-a; RSA 15-A.

It is the duty of the clerk with whom the petitions are filed to examine them. If a petition is found to be in conflict with the law, the clerk shall note the reason it is not acceptable on the petition and return it within 24 hours to the candidate. For each petition that is rejected, the candidate may file a supplementary petition with the clerk no later than the last day of the filing period for declarations of candidacy. RSA 655:26.

PARTY COMMITTEE NOMINATIONS

In the event that no declaration or petition has been filed on behalf of a candidate for any office, the appropriate party committee may make a nomination to fill the vacancy by notifying the Secretary of State on or before the Wednesday following the close of the filing period. Nominations made in this manner are also subject to the payment of the appropriate fee or submission of the usual number of petitions. Affidavits must accompany the names of the candidates within the time limit. Any candidate who accepts a nomination by a party committee, who has already filed for an incompatible office as defined in RSA 655:10, must withdraw the prior filing. Any vacancy created by such a withdrawal may be filled by nomination by a party committee as described above. RSA 655:32.

INCOMPATIBLE OFFICES

No person may file in a state primary for more than one of the following offices: governor, United States senator, United States representative, executive councilor, state senator, state representative, county sheriff, county attorney, county treasurer, register of deeds, and register of probate. No person shall seek or hold positions as

a member of the general court and county commissioner at the same time. No person shall hold 2 of the following offices: county commissioner, sheriff, county attorney, county treasurer, register of deeds, or register of probate. RSA 655:10. For local offices, see; RSA 669:7 and RSA 669:8.

CANDIDATE'S DISQUALIFICATION OR DEATH BEFORE A PRIMARY

If any candidate dies or becomes disqualified between the close of the filing period and the date of the primary, the Secretary of State may remove his or her name from the ballot and the appropriate party committee may substitute a new candidate. RSA 655:33; RSA 655:34.

The reasons for which a candidate may disqualify himself or herself are specifically defined by statute. The candidate must make a written oath that he or she does not qualify for the public office which he or she seeks because of age, domicile, or incapacitating physical disability acquired subsequent to the nomination or filing. These are the only reasons for which a candidate may disqualify himself or herself. RSA 655:33, RSA 655:38.

If the ballots have already been printed, the Secretary of State may print or authorize the use of pasters on the ballot. If no name is to be substituted, blank pasters may be applied to the ballot to blank out the name of the withdrawn candidate. **Except as provided by law, no adhesive slips, pasters, or stickers shall be used on any ballot. The use of a paster shall invalidate the vote for that office where it is used.** RSA 656:21; RSA 659:65.

FOR STATE GENERAL ELECTION - NOMINATION PAPERS

A candidate for state representative who is not running as a Republican or Democrat may have his or her name placed on the state general election ballot by filing a declaration of intent and paying the $2 administrative assessment fee with the Secretary of State's Office during the regular state primary filing period. The candidate must later file the requisite number of nomination papers, pursuant to RSA 655:40-45. RSA 655:14-a, RSA 655:17-a, RSA 655:19-c.

If a person files their declaration of intent for candidacy for a state or federal office on the last day of the filing period, they must do so in person before the Secretary of State. RSA 655:43 II.

SUBMITTING NOMINATION PAPERS TO SUPERVISORS

Only registered voters may sign nomination papers. See RSA 655:42 to ascertain the number of nomination papers needed for a particular office and the locations where those who sign the papers must be from. See sample nomination paper at page 176.

No voter may sign more than one nomination paper for each office and no nomination paper shall contain the names of more candidates than there are offices to be filled. Each voter must fill out and sign an individual paper. Nomination papers must be dated in the year of the election. RSA 655:40; RSA 655:40-a.

The completed nomination papers must be submitted for certification to the supervisors of the checklist in the community in which the voter is registered no later than 5 p.m. on the Wednesday 5 weeks prior to the State

Primary Election. The nomination paper includes a section to be completed by the supervisors. If they confirm that the person subscribing the nomination is a voter in his or her community, the supervisors should certify this by signing in the space provided. **A majority of the supervisors <u>must</u> certify and sign the nomination papers.**

In a city, the city clerk may certify the nomination papers instead of the registrars. In this case, only the city clerk needs to sign the certificate.

The supervisors must have the certified nomination papers available for the candidate no later than 5 p.m. on the Wednesday 2 weeks prior to the primary and the candidate must submit the nomination papers to the Secretary of State no later than 5 p.m. on the Wednesday one week before the primary. When the nomination papers are submitted to the Secretary of State, they must be grouped by municipality. If they are not, the Secretary of State may reject them. RSA 655:41; RSA 655:42; RSA 655:43.

VACANCIES IN PARTY TICKETS

If a vacancy in any party ticket occurs after a primary, the appropriate party committee may appoint someone to fill the vacancy, provided they do so within 3 days of the notice of disqualification or death and further provided that the name of the substitute candidate is received by the Secretary of State no later than the Tuesday prior to the election. RSA 655:38, RSA 655:39.

PRINTING OF ELECTION MATERIALS

FOR STATE ELECTIONS

The Secretary of State is responsible for preparing the ballots, forms and absentee voter materials for all state elections and state referenda, including constitutional amendments. RSA 656:1. For the purposes of facilitating the examination and recounting of votes cast, all elections shall be conducted using paper ballots. RSA 656:1-a.

REGULAR AND SAMPLE BALLOTS

Ballots for state elections are delivered to town and city clerks prior to the election. The Secretary of State determines the number of ballots to be printed for a state primary. The number of general election ballots sent is the number the Secretary of State deems sufficient for voting in the state general election. RSA 656:19; RSA 656:26.

STATE & PRESIDENTIAL PRIMARY ELECTIONS

The package of primary election ballots will include 10 sample ballots for each political party. The clerk must post 2 sets of sample ballots in public places in the town or ward within 1 day after he or she receives them. The remainder of the sample ballots are to be posted outside the guardrail in the polling area on election day. RSA 656:28.

STATE GENERAL ELECTIONS

Ten sample ballots are printed and sent to the town or ward clerk to be posted in 2 public places within the community. The remainder of the sample ballots are to be posted outside the guardrail in the polling area on election day. RSA 656:18; RSA 656:28.

POSTING SAMPLE BALLOTS

At least one sample ballot for the general election and one sample ballot for each party for each of the primaries shall be posted not higher than 48" so as to be convenient for voters in wheelchairs. RSA 658:26.

ABSENTEE BALLOTS

Absentee ballots and Federal Office Only absentee ballots are also prepared by the secretary of state. As soon as these are ready, they are delivered to the town and city clerks along with envelopes, instructions and application forms. RSA 656:33 through RSA 656:38.

Political parties and candidates sometimes promote voter turnout by sending out materials promoting voting by mail. New Hampshire is not a vote-by-mail state. To be qualified to use an absentee ballot, a voter must be unable to vote in person due to having a physical disability, religious observance, absence from the jurisdiction or must be unable to vote in person at the polling place because he or she will be at work or commuting to or from work from the time the polls open until after the time for the polls to close. RSA 657:1. Clerks should send a "notice of requirements for use of absentee ballot" with the absentee ballot materials. See a sample notice at page 133.

REGISTRATION FORMS ELECTION DAY AFFIDAVITS

The supervisors of the checklist shall ensure that a sufficient quantity of voter registration forms, qualified voter affidavits, and domicile affidavits are available at the polling place for election day registration of all qualified persons at all elections. RSA 654:7-a, I, II; RSA 654:12.

OTHER MATERIALS

The Secretary of State will also supply the following materials, either directly or through his web site, for state elections:

- Instructions to Voters;
- Posters listing the Purity of Elections statutes;
- Poster explaining to voters the photo ID law;
- Absentee ballot application (on Secretary of State's website sos.nh.gov);
- Federal Post Card Application forms (FPCA) via web link to Pentagon's FVAP site;
- Regular absentee voting affidavit envelopes;
- Absentee voting affidavit envelopes for UOCAVA voters;
- Envelopes addressed in black: "To the town or city clerk of ____" for regular absentee voters;
- Envelopes addressed in red: "To the town or city clerk of ____" for UOCAVA absentee voters;
- Envelopes printed in black stating: "Enclosed is the ballot of an absent voter" for sending materials to regular absentee voters;
- Envelopes printed in red stating: "Enclosed is the ballot of an absent voter" for sending materials to UOCAVA voters;
- Instructions for Absentee Voters;
- Adhesive stripped ballot box sealing certificates;
- Red sealing tape
- Challenged Voter forms (2), and
- Ballot boxes

FOR LOCAL ELECTIONS

The town or city clerk must prepare regular and absentee ballots and instructions to voters. The clerk may save the purity of elections statutes poster from the state election or request an additional copy from the Secretary of State. The other forms provided by the secretary of state may be used for local elections. **However, towns are responsible for providing absentee envelopes to be used at local elections.**

Any town that has adopted bylaws regarding electioneering pursuant to RSA 31:41-c should post them at each polling place at least 72 hours before any town election.

DISTRIBUTION OF ABSENTEE BALLOTS

WHO IS ELIGIBLE

A person may vote by absentee ballot:

1. Who will be absent from the city, town or place in which he is qualified to vote on the day of an election for which an official ballot is used;
2. Who is by reason of having a physical disability unable to vote in person;
3. Who is a member (or spouse or dependent of a member) of the uniformed services pursuant to RSA 654:3 and RSA 652:16-c, who will be absent on election day;
4. Who is entitled to vote as a Federal Office Only Absentee Voter pursuant to RSA 654:3;
5. Who because of observance of a religious commitment cannot vote in person; or
6. Who is unable to appear at any time during polling hours at his or her polling place because an employment obligation requires the person to remain physically at work or to be in transit to or from work from the time the polls open until after the time the polls close.

RSA 657:1; RSA 657:2.

EMERGENCY SERVICE WORKERS

If an emergency services worker receives notice after noon on the Friday before an election that he or she is being called into service under circumstances that will prevent that person from voting in person or absentee using the usual procedures, the Secretary of State's Office should be informed. The Secretary of State with assistance from the Attorney General and the Department of Safety will make every reasonable effort to get absentee ballots and materials to these emergency service workers and back to the local polling places.

One important effect of this law is that it waives the usual requirement that ballots be received at the polls by 5:00 P.M. Under this law any absentee ballot received before the polls close from a deployed emergency services worker, if found properly qualified, must be counted.

Local election officials should make an effort to ensure that local emergency services workers are aware of this law. In the event of a local emergency that ties up local emergency services workers and prevents those who planned to vote in person at the polls from doing so, local officials should contact the Secretary of State and make arrangements for a local official to transport absentee ballots and materials to the site of the local emergency and afford qualified

emergency services workers to cast absentee ballots. RSA 657:21-a.

ADVERTISING PROMOTING ABSENTEE VOTING

RSA 657:4 requires that anyone promoting voting by absentee ballot in any written advertising include a copy of the state application for an absentee ballot or a facsimile of that form. Please monitor the applications that come into your office. If you see pre-printed applications that appear to have come from political advertising but do not include the qualifications or requirements for voting absentee, immediately alert the Attorney General's Office. This procedure is intended to reduce the frequency of voters being misled to believe that they can vote absentee without justification.

UNLAWFUL USE OF AN ABSENTEE BALLOT

Anyone who votes or attempts to vote under the provisions of this chapter who is not entitled to vote by absentee ballot or anyone who votes or knowingly attempts to vote in violation of any provision of the Absentee Voting law, RSA 657, shall be guilty of a misdemeanor. Election officials suspecting that a voter has voted using an absentee ballot when that voter was able and available to come to the polls and vote in person should notify the Attorney General's Office. However, the person's absentee ballot, if the affidavit otherwise satisfies the law and the voter is otherwise qualified as a voter, must be cast and counted. A person loses his or her right to vote and to have his or her vote counted only if the voter is an incarcerated felon or has been convicted of a willful violation of the election laws. New Hampshire Constitution, Part 1, Article 11; RSA 607-A:2. Therefore, it would violate the voter's rights to refuse to count his or her ballot because of suspicion that he or she wrongfully used an absentee ballot when he or she was required by law to vote in person at the polls. While New Hampshire is a vote-in-person-at-the-polls state, it is important not to violate a person's right to vote by not counting their ballot based on a yet-to-be-proven suspicion that they are improperly voting absentee.

APPLICATIONS DISTRIBUTED BY CLERKS

Individuals desiring to obtain an absentee ballot must apply to the town or city clerk. They may use either the form provided by the Secretary of State on its website at sos.nh.gov for this purpose or they may provide the same information in writing without the form. A uniformed services member or overseas voter who wishes to obtain an absentee ballot and is not listed on the checklist must supply the information on the Federal Post Card Application (FPCA) or equivalent form. RSA 657:4; RSA 657:6; RSA 657:19-a.

A regular absentee voter must submit a separate written request for an absentee ballot for the primary election and the general election if the address to which the ballot will be sent is within the United States. The law allows (a) uniformed services voter or spouses or dependents, (b) a voter who is located outside the country but intends to return, or (c) a Federal Office Only voter, to request an absentee ballot for any election in which they eligible, using a single application. RSA 657:4; RSA 657:19-a.

Applications for an absentee ballot that are signed by the voter may be sent by e-mail attachment or facsimile to a town or city clerk. Clerks shall send absentee ballots to UOCAVA voters either by mail or e-mail, as requested by the voter.

The option to email ballots only applies to UOCAVA voters. RSA 657:15, RSA 657:19.

RECEIPT OF APPLICATION

Upon receipt of an application for a regular absentee ballot, the clerk shall determine if the applicant's name is on the checklist. All information must be provided and the form or request must be signed by the applicant. The absentee ballot application form includes a place for the voter to indicate that he or she will qualify for one of the exceptions that permit absentee voting. If the voter applies by letter or otherwise in writing, but not using the form, the application should be accepted even if it does not state the exception that will permit the voter to vote absentee.

If the applicant's name is not on the checklist, the clerk shall mark the absentee ballot application "Not Registered" and send the applicant a(n):

- Absentee registration form;
- Absentee ballot;
- Affidavit envelope, marked with the words "Not registered" RSA 657:16;
- Return envelope, marked with the words "Not registered";
- Notice of requirements for absentee voting; and
- Written notice of what documents and forms the applicant must return in order for his or her absentee ballot to be counted (page 132).

Upon receipt of an outer envelope marked "Not Registered" the clerk shall open the outer envelope. If the applicant returns the required documents in proper form, enter the applicant into Electio*Net* in the "Pending" status, and forward any voter registration documents to the supervisors of the checklist. If the applicant is found to be qualified by the supervisors, he or she shall be added to the checklist and the absentee ballot shall be processed in the same manner as the absentee ballot of a previously registered voter. The town or city clerk shall notify individuals with deficient or incomplete documents of the deficiency within 7 days of receipt of the application. If the absentee ballot is returned by the voter without the required registration documents in the proper form, the ballot shall be brought to the polling place and be marked and treated and preserved in the manner set forth by law for successfully challenged absentee ballots. An asserting a challenge form shall be completed by the appropriate election officials (often the supervisors of the checklist) that make the determination. The affidavit envelope and contents of a successfully challenged absentee voter shall be described in the supervisors' and clerk's notes, preserved unopened, stored with the ballots, and destroyed unopened when the time comes for destruction of the ballots from that election. RSA 654:7; RSA 654:13; RSA 657:16; RSA 657:26; RSA 659:27-a; HAVA Section 703.

It is recommended, but not required by law, that all successfully challenged absentee voters be sent a notice. The notice should advise the voter that his or her absentee ballot was successfully challenged or was rejected by the moderator, as well as the grounds for the challenge or the reason for rejection. The voter should be notified so he or she can correct the deficiency when voting at future elections. All persons whose voter registration application has been rejected shall be provided notice within 7 days. RSA 657:16; RSA 657:19, X. The moderator shall not unilaterally remove a voter's name from the checklist for a challenge to the voter's age, citizenship, or domicile without first obtaining a

ruling from the supervisors of the checklist, and completing a signed Asserting a Challenge form. RSA 659:27; RSA 659:27-a.

CLERKS TO SEND OR DELIVER BALLOTS

The clerk must mail (alternately, e-mail to UOCAVA voters only upon request) or personally deliver the absentee ballot, making certain that the appropriate ballot, affidavit, and instructions are enclosed. If the application for an absentee ballot does not state that the voter will be absent from town or unable to vote in person due to religious observance, physical disability, or work obligations, the clerk should also send a notice of the requirements for absentee voting. See model notice at page 132. The clerk may designate an assistant to deliver an absentee ballot provided that the assistant is not a candidate for office or working for a candidate. The clerk shall send absentee ballots in response to verified absentee ballot requests until 5 PM on the day before the election. RSA 657:15.

RETURN OF MARKED BALLOTS: CUTOFF

A voter who has received an official absentee ballot must either mail or personally deliver it to the city or town clerk. Town and city clerks must be available for absentee voters between 3 and 5 p.m. on the day before any election. This is the deadline for personally delivered absentee ballots. If a voter brings his or her absentee ballot in person to the polling place on election day, the voter should be instructed to vote in person using an election day ballot. The voter can either keep the absentee ballot/affidavit envelope or if turned in, it should be rejected, preserved unopened, and marked "voted in person." **Absentee Ballots delivered by mail shall be accepted no later than 5 p.m. on election day.** RSA 652:20; RSA 657:22.

LIST OF ABSENTEE VOTERS TO BE MAINTAINED BY CLERK

The clerk shall maintain a listing by date, arranged by voting place, of all (regular and UOCAVA) applicants (a) who have requested an absentee ballot, (b) to whom absentee ballots have been sent and (c) who have returned envelopes purporting to contain absentee ballots. This information - (a), (b), and (c) - shall, without delay, be entered into Electio*Net*. RSA 657:15, RSA 657:26

The list of persons requesting–absentee ballots is not a public document and is available only to a candidate whose name appears on the ballot, or his or her designee (if the designee presents a notarized request signed by the candidate or a copy of that request). RSA 657:15.

The list of absentee voter applicants shall not be available for public inspection at any time without a court order. The list excludes voters who have presented to the supervisors of the checklist valid protective orders pursuant to RSA 173-B. RSA 657:15.

People interested in information on who voted absentee are, after the election, entitled to see and/or copy the checklist used on election day, where absentee voters are marked with a red ink "A.V." when the voter is checked off as having voted.

The clerk should provide instructions to absentee voter applicants describing how to access the Secretary of State's website to determine whether their absentee ballot request was received, the absentee ballot was sent, if a returned ballot was received, and if rejected, the reason for

rejection. Voters can log on to the Secretary of State's website at sos.nh.gov and click on "Voter Information Lookup." RSA 657:26.

RECEIPT OF MARKED BALLOTS BY CLERK

Upon receipt of a return envelope purporting to contain an official absentee ballot, the clerk shall attach the voter's absentee ballot application to the return envelope. The envelopes shall be preserved unopened until they are processed on election day. RSA 657:18. Upon receipt of a return envelope purporting to contain registration information for UOCAVA voters, the clerk is authorized to open the outer envelope and deliver the registration information to the supervisors of the checklist. RSA 657:21.

Any absentee ballots received in the mail prior to 5 p.m. on election day must be considered valid if properly filled out.

DEATH OF AN ABSENTEE VOTER

If the election officials counting ballots have knowledge that an absentee voter has died prior to the opening of the polls, the absentee affidavit envelope must not be opened and the vote must not be counted. Supervisors of the checklist should be consulted, and an Asserting a Challenge form must be completed and signed. RSA 659:48; RSA 657:27-a.

FEDERAL POST CARD APPLICATION

The United States Department of Defense makes available on its web site "Federal Post Card Applications" (FPCAs) for voter registration and absentee ballots. The form serves in New Hampshire as a request for an absentee ballot **and** an absentee registration application.

An absentee ballot request by a UOCAVA voter on an FPCA received on or after January 1 of each year shall be valid through December 31 of the same year for all state and municipal elections to be held within that year, subject to the request of the voter and the eligibility of the voter. An absentee ballot request made the year before a presidential primary will be valid through the presidential primary in the following year. RSA 657:19-a.

The clerk should make a copy of the FPCA (or other written request (with all the required information) for an absentee ballot), submit the original to the supervisors of the checklist, keep copies in the UOCAVA folder(s) for that year, and attach the copy to each return envelope prior to processing on election day. RSA 657:19; RSA 657:19-a.

SENDING ABSENTEE BALLOTS TO UOCAVA VOTERS

Upon receipt of a properly executed application for an absentee ballot from a UOCAVA voter, whether the FPCA form (page 136), a Federal Write-in Absentee Ballot (FWAB) (page 137), or a written statement containing the required information, a town or city clerk shall retain the application and, without delay, enter the application into Electio*Net*. RSA 657:10-b; RSA 657:19; RSA 657:26

The clerk shall send the appropriate ballot and materials, regardless of whether the applicant appears on the checklist. Upon receipt of an outer envelope from an unregistered applicant, the clerk shall open the outer envelope, enter the applicant into Electio*Net* in the "Pending" status, and forward any voter registration documents to the supervisors of the checklist. Any clerk who finds an UOCAVA absentee ballot application to be invalid shall provide the voter with the

reason why it is invalid within 7 days of receipt of the application. RSA 657:19; X.

Clerks shall send absentee ballots to UOCAVA voters without delay, either by mail or e-mail, as requested by the voter. RSA 657:19.

Each town and city clerk shall establish and maintain an official e-mail address and street address, up-to-date polling place locations and polling hours for each election, all of which shall be entered in Electio*Net* and publicly available to voters. RSA 657:19-c.

CHANGING PARTY AFFILIATION - FEDERAL POSTCARD

If the voter does not indicate a party affiliation, he or she cannot vote in a primary election. Clerks are encouraged to reach out to voters who have not declared a party. Political party affiliation is not required to vote in a general election.

FURTHER PREPARATIONS

NOTICE OF VOTER IDENTIFICATION REQUIREMENTS

Every town and city clerk, and the governing body of each town or ward, shall prominently display a notice prepared by the Secretary of State explaining the photo identification requirements for voters and directing voters to the Department of State's website for additional information. Such notice shall be displayed for at least 14 days prior to each election. RSA 652:25; RSA 658:29-a

MODERATOR MUST PREPARE POLLING STAFF

The moderator is authorized to appoint assistant election officials to serve at the central polling place. 17 year olds, while not eligible to vote at an election, may be appointed as election officials. Communities should consider recruiting young people to serve as election officials as a way of encouraging broad participation in the democratic process. RSA 658:7; RSA 658:7-a.

The moderator is responsible for making certain that each of the election officers understands what his or her specific responsibilities will be. RSA 659:9.

Inspectors of election should be appointed by each of the two major political parties to work with the other election officials. Generally, there are at least two inspectors of election for each of the two major parties. However, if the number of voters at the polling place exceeds 2000, the parties may appoint 1 additional inspector for each 1500 voters. RSA 658:2.

If any such appointments are not made by the political committees and proper notification thereof given on or before July 15, the selectmen in the town or wards concerned shall make the appointments of the inspectors of election in equal numbers between the two major political parties. If the moderator so requests, the political parties may appoint on an equal basis an additional number of inspectors as the moderator deems necessary. RSA 658:2.
The ballot clerks are chosen by the moderator from among the inspectors of election. Two clerks are chosen, one from each political party. The ballot clerks shall have charge of the ballots during the time the polls are open and shall furnish ballots to the voters. RSA 658:25; RSA 659:13.

The inspectors who are not designated as ballot clerks are assigned duties by the moderator at the polling place, such as relieving the ballot clerks, greeting voters and assigning them to appropriate lines, and assisting elderly voters, the illiterate, or voters with disabilities requiring assistance in marking their ballots. RSA 658:25; RSA 659:20.

DISQUALIFICATION OR ABSENCE OF CERTAIN OFFICIALS

Any person, other than a moderator, clerk, selectman, inspector of election, or supervisor of the checklist, whose name appears on a ballot for an elected position, other than a position as an election official, is to be disqualified from performing his or her duties as an election official in that election. A moderator, clerk, selectman, inspector of election, or supervisor of the checklist, whose name appears on a ballot for an elected position, other than the position of an election official, shall be disqualified from handling of marked ballots and counting of votes. RSA 658:24. An election official whose name is on the ballot should not be appointed or assigned to do the duties of a different election officer. For example, a selectman who is on the ballot seeking re-election may perform the duties of selectman at that election, but should not be appointed or assigned to fill in for the moderator.

Election officials in towns that have adopted an electioneering ordinance pursuant to RSA 31:41-c or a conflict of interest ordinance pursuant to RSA 31:39-a must also review those ordinances to ensure they do not create a duty for the official to disqualify himself or herself.

The absence created in the position of election official or any other temporary absence must be filled as follows:

a) A moderator pro tempore shall be appointed by the moderator if the moderator is absent or disqualified. RSA 658:19.

b) A supervisor pro tempore shall be appointed by the moderator, if more than one member of the board is absent or disqualified. RSA 658:21.

c) A town or ward clerk pro tempore shall be appointed by the town or ward clerk if a clerk is absent or disqualified. If a town or city ward has a deputy clerk, the deputy clerk would fill in for the absence or disqualification of the clerk. RSA 658:20.

d) An inspector of election shall be appointed by the selectmen if an inspector of election is absent or disqualified. RSA 658:22.

The term "election official" includes the town clerk, ward clerk, deputy town clerk, city clerk, deputy city clerk, selectmen, moderator, supervisors of the checklist, registrar or deputy registrar, and any assistants appointed in accordance with RSA 658:7. The term "election officer" is specifically defined in RSA 652:14. The terms "election officer" and "election official" are generally interchangeable. If a school district conducts a separate election, the term would also include, for that election, the school district clerk, school moderator, and school board members. At a separately conducted school district election, if the school district has not adopted the town checklist, the school board members would serve as the supervisors of the school district checklist. RSA 671:16. Any official so appointed will have the same duties and

authority as the "election official" who was disqualified. RSA 658:23; RSA 658:24.

ADDITIONAL STAFF

The moderator may appoint an assistant moderator and such other election officials, as he deems necessary. The town clerk, upon request of the moderator, may appoint an assistant town clerk. The supervisors of the checklist may appoint an assistant supervisor of the checklist who will be an assistant election official and have the power of the supervisor for the purpose of registering voters on election day. RSA 658:7. The term of office of each of the assistant election officials appointed as provided in RSA 658:7 shall expire at the close of the proceedings at the election for which he or she was appointed. RSA 658:8.

EQUIPPING THE POLLING PLACE

The selectmen are responsible for providing a suitable place for holding state elections, including supplying a ballot box, pencils or pens–for marking Accuvote ballots, voting booths, a United States flag and guardrail. The town clerk must bring the ballots, absentee ballots, checklist and election forms supplied by the Secretary of State for election day. RSA 658:9. See further discussion starting on page 110.

The supervisors and the town clerk should supply sufficient voter registration forms, qualified voter affidavits, domicile affidavits, Challenged Voter Affidavits, and "asserting a challenge" forms for use on election day. On the state general election day in even years only, the supervisors shall supply a "Voter Registration Form For Use on the Date of the State General Election", which incorporates a second page that includes affidavits for identity, citizenship, age, and domicile - for situations in which such affidavits are requested by the supervisors. (See Page 140.) At each primary a "return to undeclared signature list" of undeclared voters should be printed from Electio*Net*, as well as party affiliation change forms, to allow undeclared voters to return to undeclared status on election day. RSA 654:7-a; RSA 654:7; RSA 654:34. Electio*Net* is designed to print a list of all undeclared voters that contains bar codes for each voter and party choice. When a voter signs this list indicating that he or she desires to change their party affiliation after having voted in a primary, the supervisors can use the bar code reader issued as part of the Electio*Net* system to quickly and easily enter the record of party changes into Electio*Net*. The sheets containing the signatures of those voters who choose to change party affiliation should be preserved to resolve future disputes about whether the voter actually did change party affiliation. RSA 33-A:3-a.

BALLOT COUNTING DEVICES

The mayor and aldermen of a city or the selectmen of a town may elect to use electronic ballot counting devices in their communities. If such a decision is made, the town or city must notify the Secretary of State. If a special state election for state representative occurs in a town that has adopted RSA 656:40, the secretary of state may prepare and issue paper (hand-counted) ballots, which shall be used in that election. The make and model of all electronic ballot counting devices either purchased or leased must first be approved by the Ballot Law Commission. RSA 656:40-43. The Accuvote optical scanning device, version 1.96.13, has been approved for use in New Hampshire elections.

POSTING OF WARRANT

Warning of the time and date for a general election in towns or wards and town meeting in towns is the responsibility of the selectmen. The warrant must state the hours during which the polls will be open and the hour before which the polls may not close, offices to be elected, questions to be voted on by ballot, and the polling place location. RSA 658:1; RSA 669:2.

The warrant must be posted at least 14 days prior to any election at all polling places and at the office of the town or city clerk or at the town hall. See the New Hampshire Political Calendar published by the Secretary of State for dates.

CHOOSING THE SITE

The selectmen of the town or ward must provide a suitable site in which to hold the election. This site should be well-known, such as the town or city hall, school gymnasium, fire station, etc. The room where the voting is held should be large enough to accommodate voters, election officials, and to have a public area where people can watch the conduct of the election. It must also be well-lit and heated. The polling place must be furnished with the proper supplies and conveniences.

New Hampshire's Constitution, as well as Federal and State law, require that all registration and polling places be accessible to elderly voters and voters with disabilities. An accessible polling place should have an entrance that is either at ground level or provided with a ramp; walkways which are level and continuous; smooth, even floors with no thick mats or carpets which could trip a person or block a wheelchair; doors which can be easily opened without twisting a doorknob; and, it should be well-lit with large, clear, voting instructions posted at levels visible to those in wheelchairs. RSA 658:9-a. See further discussion of accessibility starting at page 115.

Also, each polling place must have at least 1 voting booth which is easily accessible to the elderly and to persons with disabilities. The dimensions and restrictions on this voting booth are outlined in RSA 658:9, III. Each polling place must also have at least two table-top voting screens available for use in an election. The dimensions and placement requirements of the voting screens are outlined in RSA 658:9, IV. The formula for calculating the minimum number of voting booths and screens that need to be erected for an election is:

1) For a general election where votes will be cast for president, one for every 100 voters on the checklist. This requirement may be modified with the approval of the secretary of state and the attorney general if the conditions within the polling place will not permit the required number of voting booths. Under no circumstances will the required number of voting booths drop below one booth for every 125 voters.

2) For a general election where votes will not be cast for president, one for every 125 voters on the checklist.

3) For all other elections, including the state primary election, one for every 150 voters on the checklist.

These minimum requirements may be satisfied with any combination of booths or screens, provided that no more than 50 percent of the minimum requirement is satisfied by voting screens and that each polling place must never have fewer

than one voting booth which is easily accessible to the elderly and to persons with disabilities and two voting screens for use in an election. RSA 658:9, V.

Portable booths set up in pods of up to 4 voting stations may be used in lieu of booths described in RSA 658:9,II and screens described in RSA 658:9, IV. Each voting station in the pod shall have 2 sides enclosed that are at least 32 inches long and meet at a right angle. A table top shall fit into the corner of the enclosed sides with the edges of the table top that contact the sides being at least 14 inches deep and the edge of the table facing the voter no less than 25 inches in width. The third open side of the voting station shall be enclosed by a curtain large enough, and designed in a way to give the voter privacy. RSA 658:9, VI.

If your registration and polling place facilities are currently inaccessible, it is the responsibility of the selectmen of the town or ward to ensure that either a new accessible polling place is secured, or that the current facilities are made accessible. The moderator has a duty to ensure that this occurs. Any election officer may contact the Governor's Commission on Disability (271-2773), Granite State Independent Living Foundation (228-9680), or other advocacy groups for persons with disabilities for assistance in identifying accessibility problems and advice on solutions. See additional information on accessibility starting at page 115.

PUBLIC NOTICE OF POLLING PLACE LOCATION AND HOURS

The town or city clerk shall enter and maintain in Electio*Net* for each election the polling place location, street address and polling hours, and verify it on the Secretary of State's website sos.nh.gov. RSA 657:19-c.

ADDITIONAL POLLING PLACES

Any town may vote at the town meeting to provide additional polling places and to establish the districts to be served by them. The city council in any city may establish additional voting districts within the wards of the city. The city council is responsible for designating the districts within the wards and to select the various election officials to run the polling place unless the city charter provides otherwise. RSA 658:10; RSA 658:18.

The selectmen of the town are responsible for equipping the additional polling place in the same manner as the central polling place. The moderator elected by the town shall preside over the central polling place. He or she may appoint an assistant moderator, who must be domiciled in the voting district, to run the additional polling place. RSA 658:11; RSA 658:14.

The town clerk should also appoint an assistant town clerk (domiciled in the town) to assume the duties of the clerk at the additional polling place. Two additional inspectors of election for each additional polling place are to be designated by each political party. The inspectors must be domiciled in the town and qualified, in the same manner as the officers of the central polling place. RSA 658:14; RSA 658:15.

Supervisors must prepare a list of the voters entitled to vote in the polling place. No later than 14 days prior to the election, they must post a copy at the town or city clerk's office or at the town hall. They must also give the town clerk 2 copies of that checklist. RSA 658:12.

All officers of the additional polling place shall have the same duties as officers at the central polling place. RSA 658:14.

INSPECTING BALLOT CONTAINERS

The town or city clerk must open all boxes of ballots received from the Secretary of State for a state election in the presence of at least one other voter as soon as possible after those boxes are received. The clerk should verify that all the ballots are the proper ones for that town or city, remove the number of ballots needed to test the electronic ballot counting device, and then reseal the boxes using the sealing label provided in the box. RSA 656:20; RSA 656:22; RSA 656:29.

SECURITY AND TESTING OF BALLOT COUNTING DEVICES

Extra ballots are supplied to towns that use Accuvote electronic ballot counting devices. These ballots must be used to test the devices for accuracy in tabulating votes.

See instructions for security and testing electronic ballot counting devices at page 148. RSA 656:42 VII &VIII.

III. ELECTION DAY

CONDUCTING THE POLLING OF VOTES

DATES OF ELECTIONS

Town elections are held annually on the second Tuesday in March, the second Tuesday in May, or the Tuesday after the first Monday of November in odd-numbered years. RSA 669:1. Towns which adopt the provisions of RSA 40:13, known as Senate Bill 2 ("SB2") towns, adopt separate dates for a deliberative meeting and an election day where warrant articles are voted on by ballot. The dates chosen must be in accord with the restrictions set forth in that statute.

City elections are held in accordance with applicable provisions of the city charter. The state primary is held on the second Tuesday in September. RSA 653:8.

The state general election is held on the first Tuesday after the first Monday in November. RSA 653:7.

Presidential preference primaries shall be held on the second Tuesday in March or on a date selected by the Secretary of State which is 7 days immediately preceding the date on which any other state shall hold a similar election, whichever is earlier, of each year in which a President of the United States is to be elected, or the year previous. The Secretary of State will call a special election if other than on the second Tuesday in March. RSA 653:9.

TIME POLLS ARE TO BE OPEN

At all state elections the polls in both towns and cities shall open not later than 11 o'clock in the morning and may not close earlier than 7 o'clock in the evening.

In cities, the city council shall determine the polling hours at least 30 days prior to the election. RSA 659:4.

At the 1994 general election, many communities voted yes on the following question: "Shall we adopt polling hours in _(*town name*)__ at all state elections beginning with the 1996 state primary election under which the polls shall open not later than 8 o'clock in the morning?" If a community voted yes, then their polls must open at 8 a.m. for all state elections. This provision does not apply to local elections.

Any town wishing to change their polling hours may do so by voting on an article at town meeting under the provisions of RSA 659:4-a. If the article passes, the Secretary of State shall be notified, so that the question to change the hours can be put on the next general election ballot for that town. As an alternative, the governing body of a town may extend the hours of polling in the town, provided that no extension of the hours of polling may take effect sooner than 60 days after its adoption. RSA 659:4-a.

For city elections, hours are set by city charter, or by the city council. In towns, hours are to be set by the board of selectmen.

Polling hours for a town meeting or election shall be set by the selectmen or by a vote of the town. RSA 669:25. Municipalities are encouraged to have uniform polling places and hours to make it easy for voters to know when and where they vote at any election, state or municipal.

ROLE OF THE MODERATOR

The moderator is the chief election officer in charge of the polls. It is his or her responsibility to make certain that all the election officials are available on the day of the election and that each is familiar with his or her duties for the day. See further discussion of the moderator's duties starting at page 60. In cities the City Clerk is the Chief Election Officer for the city and may establish uniform procedures that will apply citywide. RSA 652:14-a; RSA 659:9-a.

SETTING UP THE POLLING AREA

The polling area should be set up to provide an orderly flow of voters. The guardrails must be placed so that no person outside the rail can approach closer than 6 feet to the voting booths. No person other than the election officials or registered voters in the process of voting may be within the rails except by the authority of the election officials. Ballots may not be removed from within the rail until sealed in storage boxes after the counting is completed. RSA 659:15.

It is recommended that a table or station be set up near the entrance of the polling area to enable voters without a photo ID to obtain and complete a Challenged Voter Affidavit. Under the law, the moderator, deputy moderator, assistant moderator, town clerk, selectman, supervisors of the checklist, registrar, city clerk, deputy city clerk, ward clerk, notaries, and justices of the peace are permitted to witness the signing of these affidavits. Accordingly, it is recommended that these tables be staffed by the selectmen or assistant election officials. RSA 652:14.

READY FOR OPENING THE POLLS

Prior to the opening of the polls, the moderator must ensure that the polls are properly equipped and staffed. Recommended checklists are provided on pages 60, 146 and 147.

SETTING UP AN ADDITIONAL POLLING PLACE

For those towns which have elected to use additional polling places, the following must be done as well:

1) Two copies of the supervisor's checklist for the area served by that additional polling place must be given to the clerk before the election.

2) On the day of the election, the clerk must bring the copies of the checklist as prepared by the supervisors and deposited with him to the additional polling site.

3) The clerk is also responsible for providing a sufficient number of ballots for the additional polling place. The preparation of this package is done in the presence of the moderator and selectmen, and it is then delivered to the assistant moderator at the additional polling place by 2 election officers designated by the moderator.

Voting procedure at the additional polling place is conducted as it is at the central polling location. RSA 658:33; RSA 658:16.

PROCEDURE FOR ACCEPTING VOTERS

1) When the prospective voter enters the polling place, they should be directed to one of three different locations:

   a) Unregistered voters: The supervisors of the checklist table to become registered;
   b) Registered voters with photo ID: The ballot clerk tables, to check in and pick up a ballot;
   c) Registered voters without photo ID: The "No Photo ID" table to obtain and sign Challenged Voter Affidavits.

2) Any unregistered person who wishes to vote in any election, shall proceed directly to the supervisors of the checklist to register to vote in the polling place. The applicant shall complete the Voter Registration Form and any affidavits required by the supervisors. Supervisors should **only accept** voter registration affidavits if they have been signed **in their presence at their request**.

He or she must prove identity, age, citizenship and domicile as required by RSA 654:12. If the applicant previously submitted an absentee voter registration form by mail, but did not submit a copy of a current and valid photo identification or other proof of qualification, then he or she must present such proof the first time the applicant votes in person. HAVA Section 303 (b). If approved by the supervisors, the newly registered voter shall then proceed to the ballot clerk, with proof of registration, to receive a ballot for that election. The supervisors may issue Challenged Voter Affidavits to new registrants that have no photo ID.

3) A previously registered voter without a photo ID should be directed to the 'No Photo ID" table. The table should be staffed by person(s) authorized to witness the signing of a Challenged Voter Affidavit. A copy of the official checklist should be at the table. If a voter approaches the table, he or she should be asked their name to confirm they are a registered voter. Once the Challenged Voter Affidavit has been signed and witnessed, the voter will be directed to take their Challenged Voter Affidavit and proceed to the ballot clerks to receive a ballot for that election.

4) A previously registered voter with a photo ID, or if the voter has no photo ID, a signed Challenged Voter Affidavit, should approach the guardrail and state his or her name to a ballot clerk. The ballot clerk then repeats the name and verifies that it appears on the checklist. If the name appears on the checklist, the ballot clerk places a check next to it, and repeats the name a second time.

5) The Ballot Clerk shall then state the address for the Voter that is listed on the checklist and ask the Voter if the address is correct:

6) If the address is NOT correct, and the Voter's current address is within the same town or ward, the Ballot Clerk shall correct the address in red on the paper checklist to reflect the correction.

7) If the address is NOT correct, and the Voter's current address is NOT within the same town or ward, the Ballot Clerk should inform the Voter that he or she is not at the correct polling place and that he or she can only vote where they are domiciled.

8) The Ballot Clerk shall request the Voter present a valid photo ID in the form of:
   a. A driver's license issued by any state or the federal government;
   b. A non-driver's license issued by any state;
   c. An ID card issued by NH DMV for voting purposes only;
   d. A United States Armed Services ID card;
   e. A United States Passport or Passcard;
   f. A NH Student ID card;
      i. See Ballot Clerk Procedure for student categories on page 160. Acceptable student photo IDs must be issued by schools identified in the Department of Education's list, which is available on the Secretary of State's website - http://sos.nh.gov/ElecOff.aspx
      ii. The student ID card has either an expiration date or an issuance date that has NOT exceeded 5 years;
      iii. EXCEPTION: Student ID cards without a date of expiration or issuance will be accepted until Sept.1, 2018.

   g. A photo ID not mentioned above, but determined to be legitimate by the Moderator, Supervisors of the Checklist or Clerk of a town, ward or city.
   h. Verification of the person's identity by the Moderator, a Supervisor of the Checklist or the Clerk of a town, ward or city. (Not a Ballot Clerk)

8-A) A valid photo identification shall show:
   a. Name and photo of the individual.
      i. The name shall substantially conform to the name of the individual on their voter registration record.
   b. The photo identification shall also have an expiration date that has not been exceeded beyond 5 years.
      i. Exception: a voter 65 years or older may use an acceptable ID without regard to the expiration date.

9) In a primary, the party affiliation of the voter must also be stated. Voters who are unaffiliated with any party may declare his or her party affiliation at a primary. Those who do so may vote the ballot of his or her new party at that election. A VOTER WHO IS ALREADY AFFILIATED WITH A PARTY ON THE DAY OF THE PRIMARY MAY CHANGE HIS AFFILIATION; HOWEVER, HE MAY NOT VOTE IN THAT PRIMARY. RSA 659:14; RSA 654:34.

10) If the voter does not present a valid photo ID or a Challenged Voter Affidavit, the ballot clerk shall tell the voter they may execute a Challenged Voter Affidavit. The ballot clerk should provide the voter a Challenged Voter Affidavit form and ask an election official authorized to sign such affidavits. (See Challenged Voter Affidavit on page 143 for list of authorized election officials.)

    If the Voter has executed a "Challenged Voter Affidavit", the Ballot Clerk shall take the affidavit from the voter and place it in a folder or container marked for this purpose.

The Voter, if still qualified to vote in the town or ward and having presented a valid photo ID verifying the voter's identity or having executed a "Challenged Voter Affidavit", shall then be allowed to enter the space enclosed by the guardrail. A challenge of a voter shall be handled as provided in RSA 659:27 through 659:32.

After a Voter is allowed into the area within the guardrail to vote

11) The Ballot Clerk gives the Voter the appropriate ballot(s). The Ballot Clerk shall use a ruler or straight edge to mark the checklist indicating that the Voter has obtained his or her ballot.

After the Moderator and Clerk no longer require access to the checklist for election reporting purposes, the Supervisors of the Checklist must scan the bar codes of those Voters marked on the checklist as having checked in and picked up a ballot. They will also scan voters to indicate that they presented Challenged Voter Affidavits.

The accuracy of the checkmarks made beside the names of voters who sign in to vote is critically important. The mark made by using a ruler or straight edge to indicate the voter received a ballot will prevent the person whose name is marked from voting again later that day. Therefore, it is very important that the mark not be erroneously placed beside the wrong name. This mark will also be used by supervisors and the Attorney General's Office as evidence that a person voted, should there be an investigation into whether the person voted at more than one polling place or in more than one state. Errors should be clearly corrected and should show the initials of the election official making the correction.

If the voter's name does not appear on the checklist, it may be because the individual was never registered, the name was inadvertently removed from the checklist, or he or she may be at the wrong polling location. If the name does not appear on the checklist, the voter may not be given a ballot unless the supervisors determine that the person had been unjustly dropped from the checklist, omitted by reason of a clerical or technical error, or qualifies to register on election day. This means that even if a person's name is removed from the checklist during a purge, that person must be given an opportunity on election day to prove that he or she is qualified as a voter. The supervisors should certify to the moderator that the voter is indeed registered and entitled to vote, and should place the name on the checklist. RSA 659:12.

To prevent voters from marking ballots in public or trying to leave the area within the guardrail with a ballot, moderators may require the ballot clerks to hand out ballots only when a voting booth is available. RSA 659:13; RSA 659:14.

For voters using the AVS accessible voting system at a primary, the voter must be handed or the fax machine must be loaded with pink paper for a Republican voter and blue paper for a Democratic voter.

12) The voter should then be directed to a vacant voting booth or voting screen in which he can mark his ballot. No voter should be allowed to remain in the booth for an inordinate length of time when others

are waiting to use it. RSA 659:15; RSA 659:25.

13) Refer to Ballot Clerk Procedure on page 160 for more information on the voter check-in process.

14) Any voter who declares to the moderator under oath that said voter is unable to mark his or her ballot without assistance shall, upon the voter's choice and request, after the moderator has informed the voter of the available accessible voting options, receive the assistance of one or both of the Inspectors of Election detailed for providing assistance to voters by the moderator or receive assistance from a person of the voter's choice provided that the person is not the voter's employer or union official. RSA 659:20; 42 U.S.C. 1973 aa-6. Both the person requesting assistance and the person providing assistance must complete the following oath:

Oath of Individual Registered Voter Requiring Assistance in Voting Pursuant to RSA 659:20 (This oath may be performed and affirmed to orally or by alternate forms of communication.)

I, _____ , do solemnly swear (or affirm) that I am unable to mark a ballot and require assistance in voting. See RSA 659:20

Oath of Individual Providing Assistance to an Individual Registered Voter Pursuant to RSA 659:20

I, _____ , do solemnly swear (or affirm) that in providing assistance to _____ , (voter), I shall mark the ballot as directed by him/her and will not unduly influence his/her decision with respect to selecting any candidate or issue presented on the ballot and that I shall thereafter give no information regarding same.

15) Any voter who spoils a ballot(s) may receive another, not exceeding 3 in all, upon returning the spoiled ballot(s) to the moderator. The moderator must write the word "canceled" on the ballot and sign it. Any spoiled ballots should be held by the moderator and sealed with the other unused ballots at the end of the counting. RSA 659:22.

16) Upon completing the marking of a ballot that will be hand counted, the voter should fold the ballot so that the votes cannot be seen. If ballot counting devices are in use, the ballot should be placed in a privacy folder so that the votes cannot be seen. In a hand count town, the voter should then approach the checkout table and state his or her name (name and party, if a primary) to the town or ward clerk. The clerk places a mark beside the voter's name on the checklist. RSA 659:23.

17) In a hand count polling place, the voter then must hand his ballot to the moderator who must place the ballot in the ballot box himself or herself. The purpose of this statute is to provide another check that the voter is depositing only one ballot in the box. Reluctant voters should be counseled that the law clearly dictates this procedure. RSA 659:23.

18) In towns that use ballot counting devices, the voter may insert his or her ballot in the ballot counting device themselves. The moderator must monitor the voter to ensure only the appropriate number of

ballots is inserted. A checkout checklist is not required in towns that use ballot counting devices. RSA 659:23, II.

19) Undeclared voters may, after declaring a party and voting, complete the party affiliation change card or by signing the list of undeclared voters provided by the supervisors at the polls to return to undeclared status on election day. Electio*Net* produces a signature list that contains a bar code for each voter. RSA 654:34, II(b). The retention requirement for this list or card is 7 years. RSA 33-A:3-a.

20) The voter should then leave the voting area. No voter whose name has been checked off on the checklist may be allowed to re-enter the polling area, except to assist a voter as mentioned under step 9 above. RSA 659:26.

CHALLENGE OF A VOTER

Any voter may have his right to cast a ballot in a given election challenged by any registered voter of the same town or ward. Election officials, challengers appointed in writing by the political party committees, or the Attorney General may also challenge a voter. RSA 659:27; RSA 659:27-a; RSA 666:4; RSA 666:5.

Usually challenges occur at the time the voter is at the check-in table before being given his or her ballot. No voter or appointed challenger shall challenge a person's qualifications to be a voter at the registration table. RSA 659:27 III. Challenges may, however, occur at any point up until the ballot is deposited in the ballot box. Challengers must be so positioned in the polling place so that they can see and hear each voter as he offers to vote, but challengers cannot be within the guardrail. RSA 666:4; RSA 666:5.

A challenge must be made for a specific reason. No challenge may be made unless an "Asserting a Challenge" form is filled out and signed under oath. See "Asserting a Challenge" form at page 144.

If the ground for the challenge is age, citizenship, or domicile, the supervisors of the checklist must rule whether or not the challenged voter either is qualified or not qualified. The moderator rules on challenges based on all other grounds. If the voter is found to be not qualified (the challenge is well-grounded), the challenged person may vote only if he or she completes and swears to a Challenged Voter Affidavit. RSA 659:27-a. If the challenge is found to have no basis to believe the person is not qualified, the voter shall be allowed to vote without completing the Challenged Voter Affidavit.

Challenged Voter Affidavits completed in response to a successful challenge should be maintained separately from Challenged Voter Affidavits completed by voters who did not present a valid photo identification during the check-in process.

For more detail on challenges, see discussion starting at page 123.

CHECKLIST OF THINGS TO DO DURING ELECTION DAY

1. The moderator should receive the absentee ballots from the clerk before the polls close, or before the time set for processing the absentee ballots. The moderator should sign a receipt for these ballots. RSA 659:46.

2. The moderator should assign an election officer to periodically check the

voting booths to remove campaign materials. This officer should also make certain that the pencil is sharpened (or that the pen has not dried out), and that the voter instructions are still posted.

3. No person who is a candidate for office or representing or working for a candidate shall, within the building where the election is being held, distribute or post any cards or other printed or written material. RSA 659:43. The moderator has the authority to prevent electioneering within the room where the voting occurs, along the path from that room to the entrance to the building, and along any corridor established by the moderator outside the building leading from the entrance door, at least ten feet wide, as far into the street or parking area as the moderator determines is necessary. See further discussion of electioneering starting at page 126.

4. No election official shall electioneer (act to influence voters) while performing his official duty. RSA 659:44. While election officials are not strictly prohibited from going outside and electioneering during breaks or while off duty, this practice is strongly discouraged. At the least the election official should remove his or her election official name tag and any other indication that he or she is an election official. Election officials who want to electioneer are strongly encouraged to temporarily step down for the entire election and allow a temporary replacement to perform their election duties.

CLOSING THE POLLS

The moderator must punctually close the polls to further voting at the hour stated in the warrant or notice, unless the hours have otherwise been extended. Everyone waiting in line when the poll closing is announced must be allowed to register and vote. If there is a line of cars waiting to gain access to parking or are backed up on the road leading to the parking lot at the moment when the polls close to voting, these individuals also are entitled to vote.

Those in line at the time the announcement is made that the polls have closed, provided they are qualified voters, must be allowed to vote. Those that arrive at the polling place after the announcement is made that the polls have closed may not be allowed to vote. The door to the polling place should not be locked until the counting of ballots is complete and the results have been publicly announced.

In the event the hours of polling are extended by a federal or state court order, the moderator shall follow the guidelines in RSA 659:26-a. See extended hours voting at page 69.

AFTER THE POLLS HAVE CLOSED

SET UP THE POLL FOR COUNTING

Once the moderator has announced that the polls are closed and the last voters who were waiting in line to vote have had the opportunity to vote, the moderator should immediately proceed to set up the voting area for the counting process. RSA 659:60.

No person other than an election official is permitted to be within 4 feet of the counting, although it is important to remember that the counting process is public. The tables should be drawn together to afford the election officers ample room to spread out the ballots for counting. RSA 659:63.

PROCESSING AND CASTING THE ABSENTEE BALLOTS

Absentee ballots must be processed before any counting takes place. The moderator must announce in a loud voice so that everyone in the hall can hear that he or she is about to begin processing the absentee ballots. Generally, absentee ballots must begin to be processed and cast into the ballot box at 1:00 p.m. unless 10 or more voters present at the polls submit a written objection to the moderator. If they do, then the processing of the absentee ballots shall be done as soon as the polls close, **but before any ballots are counted**.

Processing of absentee ballots may begin at a different time that is no earlier than 2 hours after the opening of the polls. The moderator, or designee, shall post the time at which the processing of absentee ballots shall begin at the polling place and one other public location at least 24 hours before the polls open. In addition, when the polls open, the moderator shall announce the time at which the processing of absentee ballots shall begin.

Any absentee ballots received in the mail after the start time for processing absentee ballots and prior to 5 PM on the day of the election shall be processed as soon after receipt as possible. **No ballots may ever be counted before the polls close**. RSA 659:49; RSA 659:49-b; RSA 659:50.

First the moderator opens the outer mailing envelope, being careful not to mar or tear the affidavit. The moderator then compares the signature on the affidavit to that on the absentee ballot application which the clerk attached to the return envelope at the time the ballot was received. If:

a. The name of the voter is on the checklist;

b. The affidavit appears to be properly executed;

c. The signatures on the affidavit and the application appear to be those of the same person;

d. The signatures appear to be those of a duly qualified voter who has not voted at the election; and

e. The name of the voter is not on the checklist, but he or she has provided the proper documents to become registered in the judgment of the supervisors of the checklist,

then the moderator shall publicly announce the name of the absentee voter. RSA 659:50. An exception to public announcement exists for non-public voters, voters who have established that they are under a protective order due to being a victim of domestic violence. The clerk and moderator should process non-public absentee ballots without publicly disclosing the voter's name.

If the moderator finds that any of these conditions have not been met, he or she should not open the envelope containing the ballot. The test for whether the application and affidavit appear to be signed by the same person is whether this is more likely than not. Absentee ballots should be rejected because the signatures do not match only if the differences in the signatures are significant. If an absentee ballot is rejected the moderator should write the words "Rejected" and the reason (such as "rejected as not a voter," "voted in person" or "affidavit improperly executed") for the rejection across the envelope and on the absentee ballot list provided by the clerk. If an

absentee ballot is rejected because the voter did not submit adequate materials to become registered to vote, or the moderator questions the absentee voter's age, domicile or citizenship, the moderator must complete an "Asserting a Challenge" form (page 144), with the supervisors and moderator signing it. The ballot should not be cast but must be preserved in the unopened envelope. RSA 659:27-a; RSA 659:50; RSA 659:51.

The clerk shall enter the rejected reason on the official absentee ballot list and enter the reason in Electio*Net*. RSA 659:51.

If the moderator finds that all of the conditions have been met, he may proceed with announcing the name of the absentee voter. The ballot of the absentee voter is now subject to challenge from any other voter or challenger in the town or ward.

CHALLENGES TO ABSENTEE BALLOTS

If a challenge is made to an absentee ballot, the challenger must fill out and sign the "Asserting a Challenge" form. Regardless of the merit of the challenge, the moderator should then mark the envelope containing the ballot the word "Challenged," the name and address of the person making the challenge and the basis for the challenge on the envelope containing the ballot.

Each challenged ballot must be numbered in sequence, the first so challenged being number 1 (Challenged Ballot #1, etc.)

If the ground for the challenge is age, citizenship, or domicile, the supervisors of the checklist must rule whether or not the challenged voter either is qualified or not qualified. The moderator rules on challenges based on all other grounds and must sign the "Asserting a Challenge" form. If the moderator decides the challenge is well grounded, the ballot should not be cast, but kept with spoiled ballots. The moderator shall record on the clerk's list of absentee voters the word "challenged" and the reason for the challenge. The clerk shall record this information in Electio*Net* and the reason for rejection will be made available to the voter on Secretary of State's website. RSA 657:26; RSA 659:51 III.

If there is no challenge, or if the moderator, where appropriate with assistance of the supervisors, determines that a challenge to a ballot is not well grounded, the moderator shall proceed to open the envelope containing the ballot, being careful not to unfold the ballot so that any of its marks may be seen. The mark "A.V." must be placed against the name of the absentee voter on the checklist in red ink.

If the ballot was challenged but the moderator had rejected the challenge (i.e. accepted the ballot), then the moderator must mark the reverse side of the folded ballot with the same challenge number as he wrote on the envelope containing the ballot when the challenge was made. The moderator then casts the ballot with all the other ballots, by placing the ballot in the ballot box or putting it into the ballot counting device.

The moderator should save all the rejected (unopened) and any challenged (opened or unopened) absentee ballot envelopes opened and unopened and keep them with all the ballots cast at the election. Retain these materials and preserve them in accordance with the laws governing the retention, preservation and destruction of ballots. In the event of a recount, the opened (empty) absentee ballot envelopes should

be sent to the Secretary of State along with the ballots. RSA 659:101; RSA 33-A:3-a. The clerk must record reasons for all absentee ballot rejections to enable entry into Electio*Net,* as well as transparent reporting to the voter via the Secretary of State's website. RSA 659:51; RSA 657:26; HAVA Section 703.

Once all the absentee ballots have been cast or rejected, the ballot box can be opened and the counting process begun for each office on the ballot, referendum questions and any constitutional amendments. RSA 659:51; RSA 659:52; RSA 659:53.

COUNTING THE BALLOTS

The moderator is responsible for supervising the counting of ballots. The town clerk, selectmen, and other election officials should participate in the counting process as directed by the moderator. RSA 659:60;

The moderator makes the decision on how ballots are to be counted and each moderator should devise a system for counting ballots which is accurate and which will expedite the process. RSA 659:60; RSA 659:64.

There are several proper ways to count ballots. See model instructions for counting ballots starting at page 162 for examples of how some towns hand count ballots.

A statutory study committee has recommended post election audits of randomly selected race(s) for electronic ballot device towns. Such audits are not required by law. On two occasions, the Legislature has considered but rejected law changes requiring audits, in part because the state completes more recounts than most other states. In recent elections, some moderators have been asked to conduct a second count (hand count) of certain races on election night. Moderators may use their discretion as to whether or not they will conduct such a count on election night. If they decide to conduct a second count on election night, they should have a good reason for doing so. Moderators do not need to conduct such a second count just because some members of the public request one.

DISQUALIFICATION OF ELECTION OFFICIALS IN COUNTING PROCESS

A moderator, clerk, selectman, inspector of election, or supervisor of the checklist, whose name appears on a ballot for an elected position, other than the position of election official, is disqualified from the counting of votes. The moderator shall fill any vacancy so occurring. RSA 658:24; RSA 659:58.

COUNTING BALLOTS AT ADDITIONAL POLLING PLACES

Ballots may be counted at an additional polling place if the moderator for the town or ward has authorized such beforehand and in writing. In this case, the assistant moderator with the assistant clerk and other election officers may tabulate the votes at the additional polling place. RSA 659:59.

After the votes at the additional polling place are tabulated, the assistant moderator should place the counted ballots back in the ballot box. This process should be certified by the clerk and witnessed by the election inspectors. The duplicate checklists, cast ballots, spoiled ballots, and unused ballots shall be sealed in the ballot box. (See seal on page 152.) A written report of the tabulation signed by the assistant moderator and assistant clerk should then be delivered with the sealed ballot

box to the moderator at the central polling place. RSA 659:59.

If counting has not been authorized by the moderator, then upon the close of the polls, the assistant moderator should close the ballot box and seal it in the presence of the election inspectors. He must then seal the duplicate checklists together with the spoiled and unused ballots. This whole process must be certified by the assistant clerk. All of these materials must be returned to the moderator at the central polling place by two designated election officers, one from each of the two major political parties. RSA 659:62.

The moderator at the central polling place then proceeds to count the ballots from the additional polling place.

Regardless of where the counting takes place, the final tabulation of all votes from a town or ward should be announced as a single total.

WHAT CONSTITUTES A LEGAL VOTE

The overriding consideration of how to count a ballot is the voter's intention. Determining the intention of a voter ultimately requires a common sense judgment by the election officials. Remember: the whole thrust of our election laws and their application is to enfranchise as many citizens as possible and to count their votes whenever possible. RSA 659:64.

GUIDELINES IN DETERMINING LEGAL BALLOTS

If there is a question concerning the vote on a ballot for a particular office, only the vote for that office shall be affected, and the rest of the ballot should be counted.

If a voter votes for more names than there are persons to be elected to that office **(overvote)**, his ballot shall be regarded defective for that one office and the vote(s) shall not be counted for that office. The ballot is treated as if the voter did not vote for any candidate or for either choice of a question. It is helpful in reconciling ballot counts to have counting teams record the number of **undervotes** (voting for fewer choices than were available to the voter for that office or question) and overvotes for each contested office or question.

If the ballot instructions states, "Vote for not more than 3," and the voter marks 4 candidates for that office, there are more than the permitted number of votes for the office, and the number of overvotes is 3, because the voter has given up 3 choices. The ballot counting device will record this as three "blanks".

The counting device combines the number of overvotes and undervotes into a single tally of "blanks" for each contest.

An individual may vote for one or more candidates by making the appropriate mark (i.e. an X for hand count style paper ballots or fill in the oval for Accuvote paper ballots) opposite the name(s) or by writing the name(s) on the write-in line and filling in the oval beside the name.

Write-ins: To vote for a candidate by write-in on a hand count ballot, the voter needs only to write the name of the person he wishes to vote for on the appropriate line. A mark does not need to be placed in the square opposite the write-in line.

However, when a voter is writing in his choice of a write-in candidate on the AccuVote paper ballot, in addition to

writing in the name, the oval **should be filled in** so that the scanner will know that a write-in vote has been made by the voter. If the oval is not filled in, the ballot may be sent to the bin under the ballot counting device where the fully counted ballots are sent. Nonetheless, ballots in the fully counted bin should be checked for write-ins where the voter failed to fill in the oval or other marks showing the voter's intent on ballots where the oval for that office was not filled in.

In the case of a write-in vote for a candidate whose name also appears on the ballot as a nominee of a party for the same office, the ballot shall be counted as one vote for that candidate for that office. RSA 659:67. For example, if Jane Doe is a candidate for Governor and the voter writes "Jane Doe" on the write-in line, one vote should be counted for Jane Doe. If the voter marks the oval beside the printed name "Jane Doe" and writes in the name "Jane Doe" on the write-in line, one vote should be counted for Jane Doe.

Votes cast for the same person for the same office on the ballot of different parties at any primary shall not be added together but shall be credited to the party on whose ballot the name appears and the vote is cast. RSA 659:69.

Referendum questions should be voted by making the appropriate mark next to the "yes" or "no."

No ballot without an official endorsement shall be inserted in the ballot box or counted, except unofficial ballots prepared in the event of exhaustion of the supply of official ballots. RSA 659:65. These unofficial photocopied ballots should have the signature or initials of the town or city clerk on them.

If a voter chooses to write in the name of a candidate he supports rather than marking the appropriate box for that same person printed as a candidate on the ballot, the vote is considered valid.

If a ballot does not readily lend itself to a determination of the voter's intention, the ballot shall be counted in accordance with a majority vote of the election officials present. If no particular count of that ballot can be decided by majority vote, that ballot shall be considered defective for that office and counted as if the voter made no vote for that office. RSA 659:64.

VALID VOTING MARKS

A. If a cross "X" is marked on a ballot in an imperfect manner, it shall be counted if it is possible to determine the intention of the voter from the mark.

B. The mark also is valid outside the square if it is near enough to the square or in line with the name such that it indicates the intent of the voter.

C. A double cross is valid if it is distinguishable from an attempt to obliterate a choice on the ballot.

D. Cross marks are a directive of the law and are not mandatory. The uniform use of a mark other than "X" is clearly a valid marking of the ballot. The shape of the mark may change somewhat or be somewhat irregular and still be considered uniform and therefore valid.

E. When there is a different kind of mark (i.e. a ballot marked with checks and crosses intermingled) the marks may be valid.

F. Erasures and obliterations: when two candidates have marks and one of the marks is erased or obliterated, the ballot counts for that office only if the erasure or obliteration is complete.

G. When examining a questionable mark, look at how the voter has marked other races or questions. The pattern of marking used in other areas of the ballot may reveal the intent of the voter.

COUNTING THE CHECKLIST

The moderator should direct assistants to count the number of voters who are checked off on the checklist as having voted. This number will be used in the verification process to help verify that the election night count is accurate.

REPORTING THE VOTE – VOTES, VOTERS, & BALLOTS CAST

Prior to making the announcement the vote, totals should be rechecked for any obvious tabulation errors such as missing or double counting tallies done by one counting team. Compare the vote totals for each office or question against the total number of persons checked off on the checklist as having voted. Also compare the vote totals to the total number of ballots used (ballot inventory). Refer to the Moderator's Worksheet on page 170 and Votes in Contests - Examination of Individual Races spreadsheet on page 172. Look for obvious discrepancies such as a vote total larger than the number of voters who voted from the checklist or the number of ballots used from the ballot inventory. If the vote totals exceed either number, the results are facially inaccurate and that discrepancy must be resolved. To avoid obvious mistakes, adopt verification practices using the Moderator's Worksheet and the Votes in Contests - Examination of Individual Races, which are updated in the Secretary of State's NHVotes on-line training in the Glossary and Forms Section at http://nhvotes.sos.nh.gov/login/index.php and http://sos.nh.gov/ElecOff.aspx

Many moderators ask someone with an accounting or bookkeeping background, including their Town Treasurers, to assist with the final verification, bringing a fresh set of eyes to check if the numbers make sense before the results are announced.

After all state election ballots have been counted, the town or ward clerk must report the results upon the Secretary of State's Return of Votes forms by 8 AM on the morning after the state election. The ward clerk should send copies to the city clerk. Within 48 hours after the polls close, the moderator shall provide the clerk with a Moderators Worksheet. The city or town clerk must keep a copy of the Return of Votes, Moderators Worksheet, Ballots Cast, Names on Checklist, and should keep other tally sheets and reconciliation worksheets in case there are questions. If an official state election return is sealed along with the ballots, at the request of the Secretary of State, the clerk having custody of the sealed ballots shall unseal the ballots in the presence of a state election official and retrieve the election return. The ballots must immediately be resealed and the election return must be delivered to the Secretary of State by the election official. RSA 659:73; RSA 659:75.

The moderator must report the result of the vote count to the public after the count has been completed. The moderator should post a copy of the results.

SPOILED & UNUSED BALLOTS, ABSENTEE BALLOT ENVELOPES & APPLICATIONS

The moderator should save all spoiled and uncast ballots, the rejected (unopened) absentee ballot envelopes, any challenged (opened or unopened) absentee ballot envelopes and keep them

with all the ballots cast at the election. These materials are retained and preserved in accordance with the laws governing the retention, preservation and destruction of ballots. RSA 659:101; RSA 33-A:3-a. See Retention Chart at page 179. In the event of a recount, the opened (empty) absentee ballot envelopes should be sent to the Secretary of State along with the ballots.

SECURING THE BALLOTS

After the ballots have been counted and a declaration and record of the result has been made, the moderator in the presence of the selectmen shall put the cast, canceled and unused ballots into the ballot storage boxes received from the Secretary of State, and shall indicate the number of such ballots on the seal. See example on page 152. RSA 659:95.

This resealing label, called the "Label for Resealing Ballots" must be signed by the moderator and selectmen or their designees.

Each container must be securely sealed. First seal up the box with filament tape. Second, stick the official "Label for Resealing Ballots" on the box. Third, use the red security tape to make a tape seal around the entire box, and along the edge of the label. Then tape down the ends of the label with two short strips of the red tamper-evident tape.

This red security tape will change its appearance if it is pulled loose after being stuck to the box. This "tamper-evident" tape is intended to prove that the box of ballots has not been opened between being sealed on election night and being opened at a recount or a court hearing.

Do not put marked checklists, tally sheets, Challenged Voter Affidavits, or any other documents that may be needed later in the box with the ballots.

The Secretary of State will provide containers for ballot storage only for state elections. Local officials should make certain that they have suitable containers available for preserving ballots after any local election. RSA 659:95; RSA 659:97.

The moderator and selectmen or their designees should deliver the ballots in their sealed container to the town or city clerk. The clerk shall subscribe upon the label the hour when he or she received the ballots and sign his or her name in the place provided. RSA 659:98.

IV. POST ELECTION DAY

CERTIFYING THE WINNERS

Following a primary election, the Secretary of State will directly notify all persons who won a nomination by write-in. RSA 659:89.

Following a state general election, the Governor for federal offices and the Secretary of State for state and county offices will issue a certificate of election after the time for any recount has passed. RSA 659:84.

PRESERVATION OF CHECKLIST

Within 90 days of the closing of the polls after each state general election and a presidential primary, one marked copy of the check-in checklist used at the election must be forwarded to the State Archives in Concord. RSA 659:102.

Names of voters who registered to vote and who voted in any state primary or state general election shall be included on the checklist and marked as such by the supervisors. Those voters shall be included on the voter checklist and database of registered voters for all future federal, state and local elections, so long as they are qualified to vote in these elections. RSA 654:7-b.

The duties of supervisors of the checklist include the data entry of all voter registration information and the scanning of voter history of the checklist.

After every election, state or local, the town or city clerk must preserve a marked copy of the checklist as a public record for a period of at least 7 years. See retention chart at page 179. RSA 659:102; RSA 33-A:3-a.

PRESERVATION OF BALLOTS AND RELATED MATERIALS

Ballots, absentee ballot applications, absentee affidavits, absentee ballot lists, and challenged voter affidavits must be retained by the clerk:

- For federal elections, until the contest is settled and all appeals have expired (or investigations are complete) or at least 22 months after the election, whichever is longer.
- For non-federal elections, until the contest is settled and all appeals have expired, or at least 60 days after the election, whichever is longer.
- Challenged Voter Affidavits from non-federal elections must be kept for 22 months after the election or until all appeals have expired (and investigations are complete), whichever is longer.

See retention chart at page 179 . RSA 33-A:3-a; RSA 659:99; RSA 659:100.

V. TOWN ELECTIONS

OFFICIAL VS. UNOFFICIAL BALLOT SYSTEMS

Every town in New Hampshire elects officers and conducts certain town business using either unofficial ballots, partisan official ballots or non-partisan official ballots. In order to use either partisan official or non-partisan official ballots for election of officers, a town must vote to adopt such a system at a town meeting. All towns which have never voted to adopt an official ballot system or which have voted to rescind the use of official ballots are to conduct business by unofficial ballots. RSA 669:11; RSA 669:12; RSA 669:13; RSA 669:14.

Any vote to adopt or rescind the use of partisan or non-partisan official ballots shall not take effect until the next following town election.

ELECTION DAY REGISTRATION

Any person may register to vote with the supervisors of the checklist at any election (i.e. primary and general elections, town, city, school district and village district elections). The applicant must provide proof of identity, age, citizenship and domicile as required by RSA 654:12.

For the purposes of this section "election" refers to any voting at which absentee ballots are provided.

> "Meeting" refers to the deliberative session of the town, school, or village district.

FILING FOR OFFICE

Towns that have adopted official ballots must print ballots in advance of the town election. If the town uses partisan official ballots, a party caucus as provided in RSA 669 nominates candidates for the town offices. RSA 669:37 through RSA 669:51. The caucus chairman and clerk shall certify names of party nominees. As an alternative to nomination by party caucus, a candidate may have his name placed on a partisan town election ballot by submitting nomination papers. RSA 669:18; RSA 669:49; RSA 669:52.

If the town uses non-partisan official ballots, candidates who desire a certain office must file a declaration of candidacy with the town clerk during the 10 day filing period which begins on the seventh Wednesday before the town election. All candidates who file on the last day of the filing period shall do so in person before the town clerk. RSA 669:10 through RSA 669:19.

No person shall file as a candidate for a town officer under the provisions of RSA 669:19 or RSA 669:42 for more than one seat on the same town or school district board, commission, committee or council. RSA 669:17-a. No person shall at the same time file a declaration of candidacy for any 2 or more elected offices that are incompatible under RSA 669:7.

Towns using unofficial ballots may entertain nominations from the floor at a town meeting, for people who wish to run for office.

WITHDRAWAL OF CANDIDACY PROHIBITED

After a filing period for a non-partisan town election, or after a caucus has certified a nominee for a partisan election, the town clerk may not accept withdrawals of candidacy unless the candidate dies or makes oath that he does not qualify because of age, domicile or incapacitating physical disability acquired subsequent to his filing. RSA 669:22.

ABSENTEE VOTING

Towns using official ballots must provide for absentee voting whenever official ballots are used. Absentee ballots and other absentee voting materials must be prepared and sent out by the town clerk. RSA 669:26 through RSA 669:29.

POLLING HOURS

Polling hours for an official ballot vote must be fixed either by action of a previous town meeting or by a vote of the board of selectmen. Polling hours must be posted as beginning at a certain time and ending not earlier than another hour.

The meeting may vote to extend these hours, but may not vote to shorten them. The polling hours and polling place must be posted in a warrant which clearly states which items are to be voted on by official ballot. Where unofficial ballots are going to be used, the warrant must state the place, date, and hour of the meeting, the items to be considered and the officers to be elected. RSA 669:2; RSA 669:25.

USE OF OFFICIAL BALLOTS

Most towns in New Hampshire and all cities use official ballots to elect officers. Any town may vote to adopt partisan official ballots or non-partisan official ballots for the election of town officers.

Some statutes require votes on certain questions to be taken by official ballot. For instance, RSA 41:8-b states that the question of whether a town will increase the membership of the board of selectmen must be printed on an official ballot. The language of the question is fixed by law. If the town does not use official ballots, the clerk is instructed to prepare a printed ballot for that question. In other instances, the clerk would print the question on an official ballot only if that town uses official ballots for election of officers. Such is the case with the question of combining the offices of town clerk and tax collector. (RSA 41:45-a.) If the town does not use official ballots, the question would be voted on by unofficial ballot (yes-no ballot) at the town meeting.

In most circumstances, unless a specific question is outlined in a statute with a specific direction that the question is to be placed on the official ballot, that question shall not be printed on an official ballot. The law authorizes, but does not require, the use of an official ballot for certain questions where state law prescribes specific wording to be printed on a ballot for an article to be put to the voters. The vote on any other such question would be taken by voice vote, a division vote, or by a yes-no ballot vote at the town meeting. RSA 39:3-d.

PRINTING OFFICIAL BALLOTS

Offices: The offices listed on a ballot are identical on regular, absentee (non-UOCAVA) and sample ballots. Non-UOCAVA absentee ballots must be printed on the same color paper as regular ballots. The order of offices, while dictated by state law for state elections, is left to the discretion of the town or city clerk for local elections. Most town clerks print the offices which a town is required to elect first on the

ballot - moderator, selectman, town clerk, supervisors of the checklist. Optional offices such as auditor, sewer commissioner, constable, etc. are usually printed further down on the ballot.

Whenever there are two or more candidates for the same office whose names will appear together within the same column or list on a ballot, the position of such names shall be determined according to RSA 656:5-a and the following chart, which shall be valid through June, 2014, after which date a new order will be established:

Number of Candidates	Start Number for Rotation of Names
2	2
3	3
4	4
5	5
6	6
7	2
8	8
9	1
10	8
11	7
12	1
13	6
14	2
15	14
16	4
17	1
18	12
19	5

To determine the order of names on each ballot, the candidates for each office in the same list shall be temporarily listed alphabetically by surnames and the positions in such list shall be temporarily numbered in ascending order. The candidate whose position in the initial temporary list equals the seed number selected under the above chart for the appropriate list length shall appear first on the ballot. The order of candidates after the candidate in the first position shall follow alphabetically by surname. Surnames beginning with the letter "a" will follow surnames beginning with the letter "z." RSA 656:5-a; RSA 655:32; RSA 669:23.

Voters shall vote on questions by making an appropriate mark as instructed on the ballot next to the answer they desire to give. RSA 659:19.

CHECKLIST FOR THE OFFICIAL BALLOT

1. Is everything spelled correctly?

2. Are the offices in logical order?

3. Is all the print uniform and legible?

4. Are names of candidates in correct order if more than one name appears for that office?

5. Are absentee ballots and regular ballots printed on the same color paper as required by RSA 669:24?

6. Have you made sure to print sufficient numbers of regular, absentee and sample ballots?

7. Is there a blank line for each office for voters to write in their choice(s)?

The endorsement of an official ballot is the same for partisan and non-partisan ballots and includes:

- Name of town or city (ward).

- Date of election.

- Type of election - town election, special town election, municipal primary election, etc.

- Facsimile signature of town or city clerk. Town or city seal (optional).

FOLDING OFFICIAL BALLOTS

All hand count ballots must be folded with the endorsement side showing so that a voter's marks cannot be seen. Absentee ballots must be folded small enough to fit into an affidavit envelope.

Official Accuvote ballots do not need to be folded. A privacy folder should be provided for those voters who wish to use them.

Sample ballots should not have the signature or facsimile of the signature of the clerk. Should someone make copies of a sample ballot on the paper color of the official ballot, the absence of the clerk's signature will reveal that it is not an official ballot.

RECOUNTS OF TOWN ELECTIONS

Any person for whom a vote was cast and recorded for town office may request a recount of the ballots cast. RSA 669:30. The application must be in writing and submitted to the town clerk with the applicable fee as set forth in RSA 669:31. See recount chart on page 174 and discussion of fees at page 50. The deadline for applying is 5 p.m. on the Friday following the election.

The clerk then appoints a time for the recount which is not earlier than 5 days, nor later than 10 days after receipt of the application. This period allows all recounts requested for an election to be held at one time if the clerk so wishes. The clerk must notify each candidate of the scheduled date of the recount at least 3 days prior to the recount. RSA 669:30; RSA 669:31. The notice should include information on the number of recount teams that will be used so that the candidates have the opportunity to bring an appropriate number of representatives so that the candidate or a representative can watch each recount team. A board of recount composed of the town clerk, moderator and selectmen conducts the recount. A recount officer whose election is being recounted must disqualify himself or herself from the recount. The moderator would then appoint a replacement. Candidates or their representatives ought to be given an opportunity to view, but not touch or handle, the ballots at the recount and to record any protest they have as to how any particular ballot is counted. RSA 669:32.

"When counting ballots [during a recount] the board of recount or their assistants shall visually inspect each ballot. No mechanical, optical, or electronic device shall be used for the counting of ballots". RSA 669:32.

Following the recount, the ballots are resealed and preserved by the town clerk for at least 60 days unless otherwise instructed by a court. RSA 669:33.

See the section on Swearing In Of Election Officials, at page 52 and the Oath of Office at page 138 for the law on when the winner of a recount can take office.

Any 10 voters of a town may request a recount of a question appearing on the official ballot by applying to the town clerk (or school district clerk in the case of school district questions appearing on the school district ballot). The request must be filed in writing before the

expiration of 7 days from the election (or the special meeting). The clerk shall appoint a time and place for the recount which shall be held not earlier than 5 days nor later than 10 days after receipt of said request.

The applicant shall pay to the town clerk, for the use of the town, the following fee:

(a) If the difference between the vote cast for the applying candidate and a candidate declared elected is less than one percent of the total votes cast, the fee shall be $10.

(b) If the difference between the vote cast for the applying candidate and a candidate declared elected is between one percent and 2 percent of the total votes cast, the fee shall be $20.

(c) If the difference between the vote cast for the applying candidate and a candidate declared elected is between 2 percent and 3 percent of the total votes cast, the fee shall be $40.

(d) If the difference between the vote cast for the applying candidate and a candidate declared elected is greater than 3 percent of the total votes cast, the candidate shall pay the fee as provided in RSA 669:31, II(c) and shall agree in writing with the town clerk to pay any additional costs of the recount. RSA 40:4-c; RSA 669:30; RSA 669:31; RSA 669:32; RSA 671:32.

REPORTING CAMPAIGN CONTRIBUTIONS AND EXPENDITURES

Towns and city councils may make bylaws requiring the reporting of certain campaign contributions to, and expenditures by, any candidate or political committee. The contributions or expenditures must be made for the purpose of influencing the election of any candidate for local elective office. In addition, towns may make bylaws requiring the reporting of contributions to, or expenditures by, any person or committee for the purpose of influencing the vote on any local ballot or referendum question. RSA 31:39, I(o); RSA 47:17, XIV-b.

Towns may appoint all such officers necessary to carry the bylaws into effect. Towns may enforce the observance of the bylaws by suitable penalties not exceeding $1,000 for each offense to be used as the town may direct. RSA 31:39 II & III.

VI. ELECTION OFFICIALS AND THEIR RESPONSIBILITIES

WHO IS AN ELECTION OFFICER?

"Election Officer" shall mean any moderator, deputy moderator, assistant moderator, town clerk, deputy town clerk, city clerk, deputy city clerk, ward clerk, selectman, supervisor of the checklist, registrar, or deputy registrar. RSA 652:14

ELECTION OFFICER VERSUS AN ELECTION OFFICIAL

The term "election official" is not defined by statute. The terms "election officer" and "election official" are used in the election law in manner that suggests they are interchangeable.

MODERATOR: Elected for a two year term at the annual meeting, in towns every even numbered year, in cities every other regular city election. RSA 40:1.

TOWN CLERK: Elected for a one year or three year term, depending upon which option the town voted to enact. RSA 41:45-a; RSA 41:2-a; RSA 41:16-a; and RSA 41:26-b.

SELECTMAN: Elected for a three year term at the annual meeting. RSA 41:8 through 8-e.

SUPERVISOR OF THE CHECKLIST: Elected for a six year term, one elected every even numbered year. RSA 41:46-a.

INSPECTOR OF ELECTION: There shall be two inspectors from each of the two parties that received the largest number of votes in the last previous general election. RSA 658:2. Each inspector of election shall be sworn and hold office for two years from November 1 in the year he is appointed or until a successor is appointed and qualified.

TERMS OF OFFICE - CITIES (Some election laws are different in cities as compared to towns.)

City government operates under the home rule powers recognized by Part 1, Article 39, of the New Hampshire Constitution. To that end, the general court has provided cities the authority to adopt charters which allow, with limitations intended to ensure uniform procedures and practices, to adopt a form of government that best addresses local needs. RSA 49-B:1. Cities, therefore, operate under their own charters, which once adopted can be amended and revised. Since each New Hampshire city can adopt a charter which suits its own needs, each city in the state has variations in its charter. Therefore, city election officials, their terms of office, duties and titles may differ from those in towns.

CITY ELECTION OFFICIALS. Typically city election officials include the City Clerk, the Ward Clerk(s), three Ward Selectmen, Ward Moderator, Checklist Board of Supervisors(s) or in some cities Registrars and Deputy Registrars.

HOW CITY ELECTION OFFICIALS ARE CHOSEN

- **City Clerk**: RSA 48:2 provides that a city council, being met in

convention upon the day appointed by law or ordinance, shall by joint ballot elect a city clerk.

- **Ward Clerks, Ward Selectmen, Ward Moderator**: Shall be elected in each of the wards, and shall have the powers, perform the duties, and be subject to the liabilities of those offices in towns, so far as it relates to the warning of meetings, conducting elections, counting and declaring votes, and all other matters relating to elections. RSA 44:12.

- **Board of Supervisors of the Checklist, Typically Called Registrars in Cities:** Shall be elected in each of the wards, and shall have the powers to prepare, post and revise the checklist for city elections.

- **Inspectors of Election:** The same appointment process that is followed in towns.

The City Clerk is the chief election officer for the city. The clerk is required to establish uniform procedures to be used at all polling places in the city. The other city election officials are required to follow the procedures established by the City Clerk. RSA 652:14; RSA 659:9-a.

SWEARING IN OF ELECTION OFFICIALS

OATH OF OFFICE

The moderator, town clerk, one of the selectmen or a justice of the peace may administer the oath of office. RSA 42:2.

Every town officer shall make and subscribe the oath or declaration as prescribed by Part 2, Article 84, of the Constitution of New Hampshire and any person who violates said oath after taking the same shall be forthwith dismissed from the office involved. RSA 42:1. A blank copy appears in Electio*Net*/Help/Instructions.)

Except as otherwise provided, the term of any town officer elected shall begin upon his or her election and qualification for office and shall end upon the election and qualification of his or her successor. RSA 669:10,I; RSA 41:3. No person shall assume a town office until after the time period for requesting a recount is over, except where a person is elected to an office where no other person was a candidate on the ballot for that office and no write-in candidate received 5 percent or more of the votes cast for that office. Such persons may be sworn in after the results are declared from the election and the annual business meeting has ended or at any time thereafter provided the oath is taken by the deadline established by RSA 42:6. In all other cases, if a recount is requested, no person shall assume that office until the recount is completed. RSA 669:10, II.

A person declared elected at the election whose election is affirmed by the recount may take the oath of office and assume office at any time following declaration of the results of the recount.

When a different person is declared elected following the recount, if no appeal is taken that person may take the oath of office and assume office on the sixth day following the date of the recount.

If a different person is declared elected following the recount, and an appeal is taken, that person may not assume office until the superior court has issued a final ruling on the appeal. The person holding

the office prior to the election shall continue to hold the office until a successor is declared elected by the superior court and the person declared elected by the court takes the oath of office. RSA 669:34.

Taking the oath of office constitutes assuming office. State officers assume office on the date set by the New Hampshire Constitution and County officers assume office on the first Wednesday after the first Tuesday in January of the year following the state general election at which they were elected. RSA 653:10.

WORDS IN THE OATH OF OFFICE

The oath of office is set forth in the New Hampshire Constitution at Part 2, article 84 {*Alternative language for those scrupulous of swearing set forth in italics in the brackets* – the language the italicized words are substituted for is underlined}:

> I, (state your complete name) do solemnly swear {*affirm*}, that I will bear faith and true allegiance to the United States of America and the state of New Hampshire, and will support the constitution thereof. So help me God {*This I do under the pains and penalties of perjury*}.
>
> I,(state your complete name) do solemnly and sincerely swear and affirm {*affirm*} that I will faithfully and impartially discharge and perform all duties incumbent on me as (state office elected/appointed to) according to the best of my abilities, agreeably to the rules and regulations of this constitution and law of the state of New Hampshire. So help me God{*This I do under the pains and penalties of perjury*}.

New Hampshire Constitution, Part 2, Article 84; RSA 42:1; RSA 21:24; RSA 21:25. All town officers must take the oath of office, which should be in writing. RSA 669:9. A blank copy appears in Electio*Net*/Help/Instructions.

MANNER OF DISMISSAL – BREACH OF CONFIDENTIALITY

A town officer who violates his or her oath of office can be dismissed by the Superior Court. A party seeking dismissal of a town officer must file a petition with the Superior Court. In addition to other violations of the oath of office, a town officer may be dismissed for the improper disclosure to the public of certain confidential information which that officer learned by virtue of his or her public office. RSA 42:1-a.

VACANCIES IN ELECTION OFFICES

WHAT IS A VACANCY?

A vacancy in public office occurs when:

- A person dies, resigns or ceases to be domiciled in the state or district from which he was elected. RSA 652:12, I.
- Is determined by the court to be insane or mentally incompetent. RSA 652:12, II.
- Is convicted of a crime which disqualified him or her from holding office. RSA 652:12, III.
- Fails or refuses to take the oath of office within the period prescribed in RSA 42:6 or to give or renew an official bond if required by law. RSA 652:12, IV. This would include a situation where a person is elected to office, but subsequently concedes that he or she is not qualified to hold office and for that reason

fails or refuses to take the oath of office.

- Has his or her election voided by court or Ballot Law Commission decision. RSA 652:12, V.
- Is a State Representative or State Senator and a member of the military reserve or National Guard, is unable to perform his or her legislative duties because of military service, as determined by the House for House members and the Senate for Senators, for more than 180 consecutive days and the selectmen from any town the Representative or Senator represents requests that the Governor and Council declare the office vacant. RSA 652:12, VI.
- The Superior Court has dismissed an officer pursuant to RSA 42:1-a.

See also RSA 654:1.

TEMPORARY ABSENCES

A vacancy should not be confused with a temporary absence. A temporary absence means that a certain official, still qualified to hold a position, is sick, out-of-town, or otherwise unable to perform his duties for a certain period of time.

Temporary absences among election officials must be filled under the provisions of RSA 658:19 through RSA 658:23. Vacancies in town offices must be filled as provided in RSA 669:61 through RSA 669:75. People serving in the absence of an official serve only until the officeholder returns to service. People appointed to fill vacancies serve until the next annual town election when a person is elected to fill the unexpired term, unless otherwise stated. RSA 669:61; RSA 658:24. For certain offices, such as Trustee of the Trust Fund or Highway agent, the appointee serves the remainder of the unexpired term. RSA 669:73; RSA 669:74.

VACANCIES

Whenever a vacancy occurs in any elected town office or whenever a town neglects or refuses to fill an elective town office, said vacancy shall be filled by the action of that body or person authorized by law to appoint or elect such officer for a term ending upon the election and qualification of his or her successor, unless otherwise provided. At the next annual town election, unless otherwise provided by law, the voters of the town shall then elect an officer for the full term provided by law or the balance of an unexpired term provided by law, as the case may be. RSA 669:6, I-III.

A town may choose to adopt or rescind an alternative procedure for filling vacancies. Under the alternative procedure, if the authorized person or body does not make an appointment to fill the vacancy pursuant to RSA 669:61, I within 45 days after at least one legally-qualified person has applied in writing for such appointment, then upon the filing of a petition with the selectmen signed by the number of voters required under RSA 39:3 for the warning of a special town meeting and presented not less than 90 days before the next annual town meeting, the selectmen must call a special election to fill the vacancy. The special election is subject to the provisions of RSA 39:3 and other applicable provisions governing town elections. The person elected at the special election serves for a term ending upon the election of his or her successor. RSA 669:61, IV.

WHO FILLS THE VACANCY FOR TOWN MODERATOR?

Vacancies shall be filled by appointment made by the supervisors of the checklist,

or by the town selectmen where no board of supervisors exists. RSA 669:62.

WHO FILLS THE VACANCY FOR SELECTMEN?

Vacancies shall be filled by appointment made by the remaining selectmen. Whenever the selectmen fail to make such appointment, the Superior Court or any justice thereof, on petition of any citizen of the town may appoint a suitable person. If the town has adopted the provisions of RSA 669:61, IV, and a petition is submitted thereunder before a petition for appointment by the Superior Court is submitted, the alternative appointment procedures established in RSA 669:61, IV will apply. RSA 669:63.

WHO FILLS THE VACANCY FOR SUPERVISOR OF THE CHECKLIST?

Vacancies shall be filled by the remaining supervisors. If there is only one member or the entire board is vacant, the moderator shall make the appointments. If the supervisors are elected by the partisan ballot system, the appointee shall be of the same political party as the supervisor whose place he or she is filling. Currently, in New Hampshire there are no towns that use the partisan ballot system; therefore, appointees may be from any party. RSA 669:64. Vacancies in the office of a city registrar would be filled in the same manner unless the city charter makes some other provision for filling the vacancy.

WHO FILLS THE VACANCY FOR TOWN CLERK?

Vacancies shall be filled by appointment made by the selectmen except in towns where pursuant to RSA 41:18, the clerk, with approval of the selectmen, has previously appointed a deputy town clerk, in which case the deputy shall serve as town clerk until the next annual meeting. RSA 669:65.

WHO FILLS THE VACANCY FOR TOWN CLERK - TAX COLLECTOR?

If a vacancy occurs, the deputy provided for in RSA 41:45-c shall discharge the duties of the town clerk - tax collector until the selectmen fill the position within 30 days. RSA 669:66.

WHO FILLS THE VACANCY FOR INSPECTOR OF ELECTIONS?

Town and ward political committees or town and ward selectmen may designate a list of alternates who shall meet the same qualifications as inspectors of elections, to be called in numerical order to serve in case one or more of the appointees fails to accept the appointment or is otherwise unavailable to perform his or her duties. RSA 658:5. If the parties have not made appointments and proper notification of those appointments by October 15, then the Selectmen shall appoint Inspectors of Elections in equal numbers from the two political parties. RSA 658:2. In case any appointment is not made as provided in RSA 658:2 or RSA 658:5 or vacancies are not filled as provided in RSA 658:22, then on application of 6 qualified voters of the town or ward, a justice of the municipal or district court shall appoint the inspectors. RSA 658:6.

Cities should consult their city charter when a vacancy occurs. If the charter offers no procedure for filling a vacancy, state law may provide a procedure for filling a vacancy in a corresponding town office. If this fails, the city council may decide.

ABSENCES ON ELECTION DAY

TEMPORARY ABSENCE

A temporary absence means that a certain official, still qualified to hold a position, is sick, out-of-town, has recused himself or herself because he or she is running for an office other than that of an election officer or is otherwise unable to perform his or her duties for a certain period of time.

DISQUALIFICATION OF OFFICIALS WHO ARE ON THE BALLOT

Any moderator, clerk, selectmen, inspector of election, or supervisor of the checklist whose name appears on the ballot for an elective position other than an election official is not disqualified from performing election duties so long as they do not handle marked ballots or count votes.

If a moderator, clerk, selectman, inspector of election, or supervisor of the checklist is on the ballot for election official, they can perform their duties, including handling marked ballots. We strongly recommend that officials not count votes in races in which they are on the ballot.

This disqualification creates a temporary absence.

For example, a moderator who is running for re-election is not disqualified from serving as moderator at the election where his or her name is on the ballot. If that moderator, however, is running for a different position, for example as State Representative, he or she would be disqualified from the handling of marked ballots and counting of votes. RSA 658:24.

HOW IS A TEMPORARY ABSENCE FILLED?

Temporary absences must be filled under the provisions of RSA 658:19 through RSA 658:23, which states: an election officer pro tempore shall have all the powers and duties of the officer he replaces as provided in the election laws and shall take the oath of office in like manner.

HOW LONG DOES THE PRO TEM OFFICER SERVE?

The term of office shall expire at the termination of the proceedings at the election for which he or she was appointed. RSA 658:23. For example a moderator pro tem would serve until the results were announced, the ballots sealed up on election night, and election return paperwork described in RSA 659:73 has been filed with the Secretary of State and the clerk - unless there is a recount, then until the recount is completed.

MODERATOR PRO TEM

If the moderator is absent from an election or unable to perform his or her duties, a moderator pro tempore shall be appointed by the moderator. RSA 658:19.

CLERK PRO TEM

If the town or ward clerk is absent or unable to perform his or her duties and there is no deputy clerk as provided in RSA 41:18, a town or ward clerk pro tempore shall be appointed by the town clerk. RSA 658:20.

SUPERVISOR PRO TEM

If more than one member of the board of supervisors is absent or unable to perform his or her duties, a supervisor pro tempore shall be appointed by the moderator. RSA 658:21.

INSPECTOR PRO TEM

If any of the appointed inspectors of election shall be absent or unable to perform his or her duties, the selectmen shall appoint some person qualified as provided in RSA 658:3, using the list of alternate appointees provided under RSA 658:4, unless no person on the list is available. RSA 658:22. If the Selectmen have failed to provide adequate inspectors, the moderator may also use his or her general authority to appoint election officials to appoint inspectors pro tem. RSA 658:7.

SELECTMEN PRO TEM

Although there is no specific RSA dealing with selectmen pro tempore, there are three RSAs which address this issue in general. RSA 658:7 states that the moderator may also appoint such other election officials as he or she deems necessary. The other election officials shall take the oath of office and perform such duties and have such powers as the moderator may delegate to them. RSA 659:95, which deals with the sealing and certifying of ballots, states the moderator or his or her designee and the selectmen or their designees shall sign their names in the appropriate blanks on the sealer. Therefore, at least for that purpose the selectmen may designate person(s) to perform this duty.

INCOMPATIBILITY OF OFFICES

There are several offices in town government for which a person may not file for or serve while holding another office. RSA 669:7 deals with these offices as follows:

- No person shall at the same time file for or hold any two of the following offices: selectmen, treasurer, moderator, trustee of trust funds, collector of taxes, auditor and highway agent.

- No person shall at the same time file for or hold any two of the following offices: town treasurer, moderator, trustee of trust funds, selectman, and head of any police department on full time duty.

- No person shall at the same time file for or hold the office of town treasurer and town clerk.

- No full time town employee shall at the same time hold the office of selectman.

- No official handling funds of the town shall at the same time hold the office of auditor.

- No selectman, moderator, town clerk, deputy town clerk or inspector of election shall file for or at the same time serve as supervisor of the checklist.

- No selectmen, town manager, school board member (except a cooperative school board member), full-time town, village district, or school district employee (except a cooperative school district employee,) or their associated agency employee or village district commissioner shall file for or serve at the same time serve as a budget committee member at large under RSA 32.

The provisions above refer to the actual holding of office and are not to be construed to prevent the transfer between offices of information obtained in the regular conduct of business nor to prevent the personnel in any office from

furnishing clerical assistance to any other office.

A town manager may be elected or appointed to any municipal office that would be subject to his or her supervision; but may not hold any other public office. For example, if the town road agent is supervised by the town manager, but the police chief is supervised by an elected police commission, the town manager could be elected or appointed as road agent, but not as police chief. RSA 669:8.

In the case of towns, any two appointed or elected members of the planning board may also serve together on any other municipal board or commission, except that no more than one member of the planning board shall serve on the conservation commission, the local governing body, or a local land use board as defined in RSA 672:7; RSA 673:7,I.

VII. DUTIES OF INSPECTORS OF ELECTION

APPOINTMENT OF INSPECTORS OF ELECTION

Each town and ward political committee of the two political parties which cast the largest number of votes for governor in the state at the last previous general election appoints inspectors of election. RSA 658:2. Inspectors are appointed between May 15 and July 15 of each general election year. If any party appointments are not made by July 15, the selectmen shall fill the positions in equal numbers from the two political parties. For school district meetings, conducted separately from the town election, the school board appoints inspectors. RSA 671:28.

HOW MANY ARE APPOINTED?

Two inspectors of election are appointed to act at each polling place. If the number of registered voters at a polling place exceeds 2,000, the political committees may appoint an additional inspector for each 1,500 in excess of 2,000. They also may appoint such additional inspectors as the moderator considers necessary for the efficient conduct of the election. RSA 658:2.

INSPECTORS' QUALIFICATIONS

Inspectors shall be registered to vote at the polling place where they serve. RSA 658:3.

CAN THERE BE ALTERNATES?

Town and ward political committees or town and ward selectmen may designate a list of alternates, who shall meet the same qualifications as inspectors of elections, to be called in numerical order to serve in case one or more of the principal appointees fails to accept the appointment or is otherwise unable to perform his or her duties. RSA 658:5

NOTIFICATION

The chairman of the political committees shall notify the appointees and the town clerk, or the ward clerk and city clerk on or before July 15. RSA 658:2.

ELECTION DAY DUTIES

Two of the inspectors, one from each of the 2 political parties, shall be designated by the moderator at the opening of the polls to act as ballot clerks. They shall have charge of the ballots and shall furnish them to the voters. RSA 658:25. Ballot clerks are inspectors of election who process voters in the check-in line. See page 160 for a complete description of Ballot Clerk Procedures to accommodate the Photo ID law as amended in 2014.

The other inspectors shall be assigned such duties in the polling place as the moderator may determine, including, but not limited to, relieving the ballot clerks, directing formation of lines at the poll entrance, and providing assistance to those voters who declare under oath that they need assistance. RSA 659:20; RSA 658:25.

School district inspectors shall assist the school district moderator in counting votes for school district officers and questions. RSA 671:28.

OATH OF OFFICE

Each inspector shall be sworn to the faithful performance of his or her duties and shall hold office for two years from August 1 in the year in which he or she is appointed or until a successor is appointed and qualified. RSA 658:4. See oath of office at pages 53 and 138.

VIII. DUTIES OF MODERATORS

PRE-ELECTION DAY

MODERATOR TO OVERSEE VOTING

The moderator is responsible for making certain each election officer understands his or her responsibilities. RSA 659:9. The moderator shall preside at the town meetings, regulate the business thereof, decide questions of order, and make a public declaration of every vote passed, and may prescribe rules of proceeding; but such rules may be altered by the town. RSA 40:4. In cities, the City Clerk may establish uniform city wide procedures that must be followed by the ward moderators.

APPOINTMENT OF ADDITIONAL INSPECTORS OF ELECTION

If the moderator requests, the political parties may, between May 15 and July 15 of each even numbered year, appoint an equal number of additional inspectors. After the time for appointment by the parties has expired, the Selectmen shall appoint additional inspectors of election to satisfy the moderator's request. RSA 658:2.

MODERATOR PRO TEM

If the moderator is absent from any election or unable to perform his or her duties, he shall appoint a moderator pro tempore. RSA 658:19

SUPERVISOR PRO TEM

If more than one member of the Supervisors of the Checklist is absent from any election or unable to perform his or her duties, the moderator shall appoint a supervisor pro tempore. RSA 658:21. At a town election a supervisor vacancy shall be filled by the remaining supervisors, unless there is only one, then by the moderator. RSA 669:64.

APPOINTMENT

The moderator may appoint an assistant moderator and such other election officials as he or she deems necessary. The town clerk, upon request of the moderator, may appoint an assistant town clerk. RSA 658:7.

CENTRAL POLLING PLACE

The moderator elected by the town shall preside over the central polling place. He or she may appoint an assistant moderator, who must be domiciled in the voting district, to run the additional polling place. RSA 658:11 through RSA 658:14.

ELECTION DAY

IN CHARGE OF THE POLLS

The moderator is the chief election officer in charge of the polls. It is his or her responsibility to make certain all election officials are available on the day of the election and that each is familiar with his or her duties for the day. New Hampshire Constitution, Part 2, Article 32; RSA 659:9. Prior to the opening of the polls, the moderator should ensure that:

- 3 copies of the Instructions for Voters have been posted outside the guardrail. RSA 658:28.
- 1 copy of the Instructions for Voters has been posted inside every booth. RSA 658:28.
- Sample ballots have been posted outside the guardrail (8 for the state general election and 8 of

each party for the primary, and at least several for local elections). RSA 658:26. State law requires a minimum of 2 sample ballots be posted, however, the law also requires the Secretary of State to provide 10 sample ballots, two for posting in advance of the election, therefore it is recommended that the remaining 8 be posted.

- At least one sample ballot for the general election and one sample ballot for each party at a primary election are posted no higher than 48" for those voters in wheelchairs. RSA 658:26.

- A notice indicating the time for processing absentee ballots is posted;

- A sharp pencil or pen has been placed in each voting booth.

- Purity of Elections statutes are posted outside the voting area. RSA 658:29.

- 2 duplicate checklists to be used at the election are ready and available. If the town/ward uses ballot counting devices, only 1 checklist is required.

- Certify that all electronic ballot counting devices and memory cards have passed testing requirements and deposit evidence of testing in the front pocket of the canvas bag for the device. Verify that all device seals are intact and that appropriate activity and access logs are recorded, signed and stored in the front pocket of the canvas bag. RSA 656:42. See Electronic Ballot Counting Device Standard Operating Procedures for Testing & Security Seals on page 148.

The moderator should then:

- Count all the ballots delivered to him or her from the clerk, to establish the number of official ballots. This number must be reported on the moderator's certificate, will aid the moderator in anticipating the need for the clerk to prepare extra ballots if there is a heavy turnout, and is available as a cross reference when checking the accuracy of the ballot counting, and completing the Moderators Worksheet. (See page 170.)

- Fill out the two copies of the moderator's certificate if the election is a state election. One copy is for his or her records and one will be returned to the Secretary of State with the Return of Votes.

- Position all officials:

  - Trained greeters are positioned to meet voters as they enter the polling place and to ask them to go to (a) the supervisors of the checklist if they are unregistered (b) the "No Photo ID" table if they have no approved photo ID, or (c) the "Voter Check-in" line if they are registered and have a photo ID or a completed Challenged Voter Affidavit.

  - A "No Photo ID table" should be equipped with a copy of the checklist, ballot clerk instructions, a copy of RSA 659:13 (the photo ID law), and copies of Challenged Voter Affidavits.

- Ballot clerks sit at the check-in table.

- The town or ward clerk is positioned at the checkout table by the ballot box.

- In hand count towns, the moderator stands where the ballot box is placed and inserts the ballot handed to him or her by the voter. In towns where ballot counting devices are used, the voter may insert his or her cast ballot into the device without the assistance of the moderator. The moderator or a designee should still closely monitor the process to provide assistance and ensure that only the proper number of ballots is inserted by any one voter.

- Position any challengers appointed by either a party committee or the Attorney General, outside the rail, but in a position where he or she can hear and see each voter as the voter checks in.

- Position the selectmen, supervisors and any other assistants he deems necessary within the polling place.

- Open the polls punctually at the appointed hour.

- Inspect the ballot box, prior to the first ballot being issued to a voter, and show any members of the public present that it is empty. If a ballot counting device is used, the moderator should display the zero tape produced by the device when it is set up and turned on for the election. This tape shows that the starting count for each candidate and question is zero.

- Seal the ballot box.

- Publicly announce when the processing of absentee ballots shall begin. This customarily begins at 1 PM. However, if 24-hours notice is provided in two public places, the Moderator may announce the beginning of processing absentee ballots no earlier than two hours after the polls open. RSA 659:49.

- Begin accepting voters.

RSA 658:30 through RSA 658:36.

ARRANGEMENT OF THE POLLING PLACE

New Hampshire election laws do not specify any specific arrangement of the polling place. The Secretary of State provides an example of a polling place layout that can be used for hand-count and vote counting device towns. See diagram on page 178. Variations should ensure that there is some public area outside the rail where the public can watch the election. It is also essential that there is a clear and well marked path from the accessible entrance to the check-in table.

EXIT POLLING

No one can obstruct voters as they enter or exit the polling place, and no one can electioneer within the polling place. Otherwise, there are no specific restrictions on exit polling. The same limits should be placed on persons taking exit polls, girl scouts selling cookies, the flower club bake sale, or any non-election activity that is allowed at the building where voting takes place. The best practice is to require anyone involved in

any of these activities to set up outside the railed-in area and outside the usual and customary path into and out of the polling place. Where an adjacent room is available, that is an ideal place for such activities. New Hampshire Constitution, Part 2, Article 32; RSA 659:9; RSA 659:43; RSA 659:44.

BALLOT COUNTING DEVICES

Those communities which utilize electronic ballot counting devices shall not be required to have a check-out checklist. The voter should feed the ballot into the ballot counting device without the moderator directly handling the ballot. RSA 659:23.

The Attorney General's Office reports complaints from voters, particularly in communities where ballots are printed on two sides, that the voter's right to cast a secret ballot is violated when it is necessary to make the marked ballot visible while carrying it from the voting booth to the ballot counting device and while inserting the ballot into the device.

It is recommended that communities using electronic ballot counting devices provide each voter with a privacy folder to carry the marked ballot in. A properly designed privacy folder looks like a typical manila file folder, is wider than the ballot, but slightly shorter. When the ballot is placed in the folder the ballot sticks out of the top just enough to allow the ballot to be fed into the ballot counting device while the voter holds the sides of the privacy folder.

When a privacy folder is used, it is not possible for other voters standing in line, persons standing outside the rail monitoring the voting, election officials, or the moderator to see how the ballot has been marked.

The privacy folder is turned in to the moderator once the ballot is fed into the ballot counting device. Because the folders can be recycled back to the ballot-issuing table as soon as the voter feeds his or her ballot into the ballot counting device, it is not necessary to have a folder for every ballot printed. Depending on the size of your community, typically one (1) privacy folder for every voting booth will be sufficient.

ACCESSIBLE VOTING SYSTEM

The Accessible Voting System, the telephone – fax system which is provided by the Secretary of State and which must be available for use by voters, must be placed in the accessible voting booth provided by the Secretary of State for that purpose. This booth is ideally set up near the moderator's post by the ballot box/ballot counting device, to permit the moderator to readily receive the ballot by hand in a privacy sleeve. It shall be turned on and tested before the polls open. HAVA Section 301.

DISQUALIFICATION OF OFFICIALS

If an election official other than moderator is disqualified, the moderator shall appoint an assistant who shall perform the same duties until the official can properly return. RSA 659:58.

DESIGNATION OF BALLOT CLERKS

The moderator shall designate 2 of the inspectors of election, one from each party, to act as ballot clerks for each check-in station. RSA 658:25; RSA 659:23.

NUMBER OF VOTERS WITHIN GUARDRAIL

The moderator must ensure that the number of voters within the guardrail

who have a ballot, excluding those handing the moderator the ballot or feeding it into the ballot counting device, does not exceed the number of voting booths and voting screens. RSA 659:16. When the booth(s) equipped for use by voters with disabilities are open they should be used by the next voter waiting for a booth. These booths equipped for use by voters with disabilities need not be reserved exclusively for use by voters with disabilities. They should be used by all voters.

Voters must not be allowed to leave the area enclosed by the guardrail while in possession of a ballot. RSA 659:15. Anyone who knowingly removes an official ballot to outside the guardrail before the close of the polls is guilty of a misdemeanor. RSA 659:38. No one other than election officials, voters casting their ballot(s), or a voter admitted by approval of the moderator to assist another voter, can be admitted within the guardrail. RSA 659:21. Voters may not allow their marked ballot to be seen by any person with the intention of letting it be known how they are about to vote. ~~Voters may not take a digital image or photograph of their marked ballot and share the image via social media.~~ RSA 659:35.

ASSISTANCE IN VOTING

Any voter who declares to the moderator under oath that he or she needs assistance marking their ballot, shall, upon the voter's choice and request, after the moderator has informed the voter of the accessible voting options that are available, receive the assistance of one or both of the Inspectors of Election detailed for providing assistance to voters by the moderator or receive assistance from a person of the voter's choice, provided that the person is not the voter's employer or union official. RSA 659:20; 42 U.S.C. 1973 aa-6. Both the person requesting assistance and the person providing assistance must complete the oaths on page 139.

A PERSON WHOSE PHYSICAL DISABILITY DOES NOT ALLOW THEM TO SIGN THEIR NAME

Some accommodation should be made to allow a person with this type of disability to vote. The best practice would be for the clerk to appoint someone neutral to take the absentee ballot to the voter and to verify that the stamped name is legitimate as the voter's signature. The clerk's appointee should countersign both the application and the affidavit envelope next to the stamped signature or submit a written and notarized statement to accompany the sealed affidavit envelope verifying that the voter himself or herself caused the ballot to be marked and the affidavit to be stamped with the voter's signature. New Hampshire Constitution, Part 1, Article 11.

ASSISTANCE TO OBVIOUSLY IMPAIRED PERSONS WHO ARE UNABLE TO COMMUNICATE

Persons with Alzheimer's disease or persons with other disabilities, who are otherwise qualified as voters, should be allowed to vote as long as they are able to vote without assistance. If the voter needs assistance, he or she must be able to communicate his or her choice on how their ballot should be marked. Any means of communication that could be understood by a stranger should be considered acceptable. This might include communication such as blinking their eyelids once for yes and twice for no, or tapping a finger once or twice, as the person assisting them reads off the choices. A family member or friend should not be allowed to mark the ballot based on how the family member or friend believes the voter would have

voted had the voter been able to communicate a choice. A person with a power of attorney is not allowed to vote for such person. Both the voter and the person assisting the voter must take the oath required by law. The voter must be afforded the opportunity to take the oath orally, in writing, or by any other means of communication. If the voter lacks the capacity to take the oath they are not allowed to vote. RSA 659:20.

SPOILED BALLOTS

A voter who spoils his or her ballot may receive another one, not to exceed 3 in all including the ballot originally issued, after returning the ballot to the moderator. The moderator must write "canceled" on the ballot and sign it. Any spoiled ballots are held by the moderator and sealed with other ballots when counting is over. RSA 659:22.

OBSERVERS

Anyone can come and watch the casting of ballots and the counting of ballots and see for himself or herself whether the election is conducted in accordance with the law.

These individuals can best be understood as "Observers." They have no special status in law and like all members of the public are entitled to silently observe the election as long as they are not disruptive.

At recent elections, political parties and activist groups have sent a variety of individuals to observe the conduct of elections in New Hampshire. Some of these individuals were attorneys or other people who had received some training in the law of elections. These individuals should be accommodated as much as is practical without allowing them to disrupt the election.

It is recommended that these individuals be addressed by the moderator and told that they cannot interfere with voters or election officials. If the Observer has a question or concern, he or she should bring that concern to the moderator, by silently or quietly signaling to the moderator, who should as soon as is convenient meet with the Observer outside the rail.

Observers may not be positioned within 5 feet of the voter registration table where the exchange of non-public information between the applicant for registration and the election official receiving the information may be heard or seen. RSA 654:7-c.

No person unauthorized by law may stand or sit within 6 feet of the ballot clerk for purposes of observing the check-in of voters without the express permission of the moderator. RSA 659:13-a.

The Attorney General's Office is available on election day to address concerns that these Observers may have with election procedures. If a moderator is unable to easily resolve concerns raised by an Observer, or if an Observer insists that the law is not being followed, consider contacting the Attorney General's Office. The following toll free line is staffed by attorneys during each State election day: 1-866-868-3703. These attorneys are prepared to review the law with the moderator or any observer and to resolve any concerns that the election law is not being complied with.

CHALLENGES

Any voter may have his right to cast a ballot in a given election challenged by any registered voter of the same town or ward. Election officials and challengers appointed in writing by the political party

committees or the Attorney General may also challenge a voter. RSA 659:27; RSA 659:27-a; RSA 666:4; RSA 666:5.

Usually challenges occur at the time the voter is at the check-in table before being given his or her ballot. No voter or appointed challenger shall challenge a person's qualifications to be a voter at the registration table. RSA 659:27 III. Challenges may, however, occur at any point up until the ballot is deposited in the ballot box. Challengers must be so positioned in the polling place so that they can see and hear each voter as he offers to vote, but challengers cannot be within the guardrail. RSA 666:4; RSA 666:5.

A challenge must be made for a specific reason. No challenge may be made unless an "Asserting a Challenge" form is filled out and signed under oath. See "Asserting a Challenge" form at page 144.

If the ground for the challenge is age, citizenship, or domicile, the supervisors of the checklist must rule whether or not the challenged voter either is qualified or not qualified. The moderator rules on challenges based on all other grounds. If the voter is found to be not qualified (the challenge is well-grounded), the challenged person may vote only if he or she completes and swears to a Challenged Voter Affidavit. RSA 659:27-a. If the challenge is found to have no basis to believe the person is not qualified, the voter shall be allowed to vote without completing the Challenged Voter Affidavit.

RSA 659:27-32. Challenges to voters are discussed further starting at page 123.

The law makes it a specific felony offense to engage in voter suppression, for example, making a challenge based on information the challenger knows to be false or misleading.

"No person shall engage in voter suppression by knowingly attempting to prevent or deter another person from voting or registering to vote based on fraudulent, deceptive, misleading, or spurious grounds or information. Prohibited acts of voter suppression include:

(a) Challenging another person's right to register to vote or to vote based on information that he or she knows to be false or misleading.

(b) Attempting to induce another person to refrain from registering to vote or from voting by providing that person with information that he or she knows to be false or misleading.

(c) Attempting to induce another person to refrain from registering to vote or from voting at the proper place or time by providing information that he or she knows to be false or misleading about the date, time, place, or manner of the election.

IV. Whoever violates the provisions of this section or whoever conspires to violate the provisions of this section shall be guilty of a class B felony." RSA 659:40

ABSENTEE BALLOTS

The moderator shall receive absentee ballots from the clerk prior to the closing of the polls or time set for processing of absentee ballots. The moderator should sign a receipt for the ballots. RSA 659:46; RSA 659:49.

ANNOUNCEMENT BY MODERATOR

At the pre-announced time, the moderator begins processing absentee ballots by announcing that he or she is about to open the envelopes. The

moderator removes the envelope containing the ballot of each absentee voter and he or she compares the signature on the affidavit and the application. If the name of the voter is on the checklist, the affidavit is properly executed, and the signatures match, the moderator then publicly announces the name of the absentee voter. With respect to any voter who has been included in the address confidentiality program under RSA 7:43 or who has been granted a protection order under RSA 173-B, the moderator shall identify such voters as "confidential voter #1" and "confidential voter #2", and so forth. RSA 659:50.

CHALLENGES OF ABSENTEE VOTERS

All absentee ballots are subject to challenge after the moderator publicly announces the name of the absentee voter, except for voters provided for in RSA 7:46 and those who have a valid protection order under RSA 173-B, but not after the ballot is removed from the envelope.

If the absentee ballot is challenged, the moderator shall write on the envelope containing the ballot the word "challenged," number the ballot and write the name and address of the person making the challenge and the basis of the challenge on the envelope or on a form for that purpose. If the ground for the challenge is age, citizenship, or domicile, the supervisors of the checklist must rule whether or not the challenged voter either is qualified or not qualified. If the challenge is based on the reported death of the voter, the supervisors should be consulted, since it is their duty to follow a procedure for striking deceased individuals from the checklist. The moderator rules on challenges based on all other grounds. If the moderator determines that the challenge is well grounded, the envelope is not opened and it is preserved unopened with other cast ballots. If the challenge is <u>not</u> well grounded, the envelope is opened and the reverse side of the ballot is numbered with the same number written on the envelope. The ballot is then processed in the same manner as an unchallenged absentee ballot. RSA 659:51. The moderator shall ensure that an "Asserting a Challenge" form (see page 144) is completed for all challenged and rejected absentee ballots, including those that are challenged by the moderator, clerk and other election officials. RSA 657:27; RSA 659:27-a; HAVA Section 703.

PROCESSING ABSENTEE BALLOTS

The moderator opens the envelope containing the ballot in public (envelope is preserved), the ballot is removed (without unfolding it or examining it), a checkmark is placed beside the name of the absent voter on the checklist with the letters "AV" in red ink. The ballot is deposited in the ballot box or inserted into the ballot counting device and the opened (empty) envelope is preserved using the same retention period as the cast ballots. RSA 659:49-b; RSA 659:52; RSA 659:101; RSA 33-A:3-a.

REJECTED ABSENTEE BALLOTS

If the moderator determines the absentee voter is not entitled to vote, the envelope is not opened and the reason the ballot is rejected is marked on the envelope. The moderator shall also record next to the name of the absentee voter on the clerk's absentee voter list the word "rejected" and the reason for the rejection. The moderator preserves unopened rejected absentee ballot envelopes using the same retention period as the cast ballots for that election. RSA 659:53.

IMMATERIAL DEFECTS

The moderator shall **not** reject an absentee ballot for any immaterial addition, omission or irregularity in the preparation or execution of any writing or affidavit required herein. RSA 659:54.

No absentee ballot that has been electronically transmitted to a UOCAVA voter shall be rejected for any ballot, envelope or affidavit weight, size or color, or any ink, font size, alignment or color. This means that the ballot must be accepted and counted even if the ballot is on paper that is heavier or lighter than regular ballots, is printed on an odd size of paper or in a different color ink or font. RSA 659:54-a.

Moderators should exercise careful judgment when rejecting an absentee ballot because the signature of the voter on the affidavit does not appear to be signed by the same person who signed the absentee ballot application. The test is whether it is more likely than not that the same person signed both forms. It is a natural and common occurrence that a person's signature will change over time and will have differences even when the person writes out his or her signature several times, one immediately after another. A moderator deciding to reject an absentee ballot because the signatures do not match should be prepared to explain to the Attorney General's Office or a Superior Court judge what specific characteristics on the two signatures were the basis of the decision that they were more likely than not signed by different people. While signature verification is an important safeguard against voting fraud, as with all safeguards, the analysis starts with a presumption of validity and the decision to disenfranchise a voter must be made only when there is sufficient evidence to justify that act.

OUT OF BALLOTS

The moderator should monitor the voter turnout and request the town or city clerk to prepare additional unofficial ballots if it appears that the supply of official ballots will be exhausted. RSA 659:24. Any unused absentee ballots should be authenticated and used first. Next, photocopies of the official ballot should be used. These unofficial ballots must be authenticated by the signature or initials of the clerk or a designee prior to the ballots being issued to voters. This will distinguish these extra ballots from any that might be created and added to the official ballots fraudulently.

It is essential that the clerk and the moderator keep an accurate count of the number of absentee or photocopy ballots that are put into use as election day ballots. The total number of ballots used, that is issued to voters, must be reported to the Secretary of State. The total number of ballots used is an important number, because it can be used by the moderator to compare with the total votes cast for particular offices or questions when reconciling the ballot count.

Only authentication marks, typically the signature or initials of the clerk, can be made on these ballots, otherwise, it is a misdemeanor for any election officer to place a mark on any ballot, except when marking a ballot at the direction of a voter with disabilities, extended hours, marking a spoiled ballot or marking a challenged ballot. RSA 659:36; 659:26-a.

The moderator should make his or her best effort to prevent the use of unofficial ballots from inadvertently compromising the secrecy of how the last few voters marked their ballots. For example if only one unofficial ballot is used and the people who will be counting know who the last voter was, identifying

the unofficial ballot would make it possible to tell how that person voted. When the ballots are examined during hand counting it should not be possible to tell how any voter voted by knowing who used the unofficial ballot. As a general rule, try to have no less than ten voters use unofficial ballots, even if doing so means a few official ballots are not used prior to starting to use unofficial ballots.

Applying the same principle, try to ensure that at least ten voters use the Accessible Voting (telephone-fax) System, voting system that must be available for use by voters with disabilities. Ideally the moderator and election officials would use the system early during election day to ensure their familiarity with the system should they need to assist voters. Other voters can be invited to volunteer to use the system.

VOTING DURING EXTENDED HOURS

RSA 659:26-a provides that if the polls are ordered to be kept open for extended hours, the moderator shall cause the ballots cast during those extended hours to be marked with the letters "EH." The ballots should be marked before they are given to voters. The position of the mark should not interfere with the marking or counting of the ballots and should be uniform on each ballot. If the ballots have offices or questions on only one side, the mark should be put on the opposite side.

These "EH" ballots should be cast and counted in the usual manner, but should be separated and held apart from the other ballots when stored. In the unlikely event extended hours are ordered, but a court later determines that people should not have been allowed to vote during extended hours, a court can order these ballots retrieved from storage, counted, and the votes cast removed from the totals for that election. RSA 659:26-a.

CLOSING THE POLLS

The moderator shall close the polls to further voting at the hour stated in the warrant or notice, unless the hours have been extended. All voters who are standing in line or waiting in a line of cars to get parking or into the parking lot who plan to vote or to register to vote must be allowed to register and/or vote if they are in either line when the polls close. The moderator should oversee the determination of who is at the end of the line, if one exists. Common sense and an approach that treats everyone equally should be applied in allowing a voter crossing the room or parking lot to join the line at the moment when the poll is declared closed to be treated as being in line. If the polling place parking lot is full and a line of cars is backed up waiting to gain access to parking, it is necessary to determine the last voter waiting in the line of cars at the moment when the polls close and to allow that voter to get parked and get into the polls to vote. Moderators should enlist the assistance of law enforcement to try to prevent waiting lines of cars and if necessary to identify the final voter in line when the polls close.

The public has a right to observe both voting and counting of ballots. Therefore, do <u>not</u> lock the doors to the polling place as a means of notifying those people who arrived after the polls have been officially closed that they can not join the line of those who were at the polls before closing and are waiting to register and vote. Moderators should plan to have election officers or law enforcement officers available to prevent late arrivals from joining the line of those

waiting to vote after the official hour for closing the polls has passed.

Polling places must be open to the public to observe voting and vote counting. Some mechanism, other than locking the building, should be used to establish who the last person in line is who arrived in time to be allowed to vote. Moderators may want to have additional staff prepared for this duty or may want to call upon law enforcement officers detailed to the polling place to assist in this task.

RETURN OF MATERIALS FROM ADDITIONAL POLLING PLACE

If the moderator does not order that the ballots be counted at the additional polling place as provided in RSA 659:59, the assistant moderator at the closing of the polls shall seal the ballot box. The sealing will be done in the presence of the inspectors of the election and certified by the assistant town clerk at such polling place.

CERTIFICATION OF CHECKLIST

After closing the polls at a state election, the moderator and town or ward clerk shall certify on the checklist that it is the one used by them at said election and that the list of legal voters is correct and complete. RSA 659:56.

COUNTING OF VOTES

The moderator shall oversee the counting of votes by other election officers, including the selectmen and town clerk, and may discharge any other duties relating to the counting of votes. The moderator sets up the voting area for the counting process. No ballot shall be placed within 4 feet of the guard rail during the counting of votes. RSA 659:63. Each moderator should devise a system for counting ballots which will expedite the process. RSA 659:60. If absentee ballot processing was not previously completed, all absentee ballots must be processed before ballot counting starts. RSA 659:61.

The moderator may select volunteers to assist election officers in counting ballots. These volunteers must be voters in the town or ward or 17-year-olds who would be qualified as a voter were they 18 years old. RSA 658:7 gives the moderator authority to appoint such election officials as he or she deems necessary. Swear in these non-election official volunteers as election officials (inspectors of election pro tempore). As election officials, the volunteer ballot counters are swearing or affirming that they will perform their duties lawfully and they become subject to criminal prosecution for official misconduct pursuant to RSA 666:3.

Errors occasionally occur during the calculation of vote totals. Sometimes errors are made when votes from different counting tables are added together, when totals of hand counted ballots are added to totals of machine counted ballots, or when results from tally sheets are transcribed to the Return of Votes. Counting is often completed by election officers who have been on duty for 10-12 hours prior to the start of counting. Adding checks and balances to the counting process will require additional time and/or personnel, but it will be easier and cheaper than conducting a recount. The legitimacy of the election process and the public trust in elections is negatively affected when recounts reveal counting or totaling errors. Moderators are encouraged to consider using one or more techniques for avoiding counting and tabulation errors which are currently used in various towns and cities. See Moderator's Worksheet on page 170 and the Votes in

Contests - Examination of Individual Races spreadsheet on page 172.

In towns using ballot counting devices in party primaries, moderators must order and print out the "long report" tape so that "ballots cast" totals can be obtained for each party. RSA 659:73.

To minimize the chance of inadvertent mistakes, moderators are encouraged to use the services of bookkeepers, accountants, math teachers, the town treasurer, or others who work daily with numbers to reconcile the results on election night, providing the forms to them in advance. Ideally a person with these skills who does not otherwise work the polls or participate in the counting would join the process at the end. This person should compare the votes in each contested race with the other tallies of ballots cast.

Ideally the total of the votes for all candidates and write-ins, plus the total number of **overvotes** (choices in a contest which are given up by a voter when they mark more than instructed in the "Vote For Not More Than" instructions on the ballot) and **undervotes** (choices not made by the voter in a contest on the ballot) should equal the number of ballots used and voters voting. Your results are facially invalid if the number of votes cast for candidates or the total number of yes plus no votes for a question is greater than the total number of ballots used or the total number of voters checked off as voting. A few extra minutes of checking on election night can easily identify a tallying mistake and avoid both a loss of public confidence in the ballot counting process and the time and expense of a recount.

DECLARING THE RESULTS

The moderator must publicly declare the results of the election. Each write-in vote, even votes for fictitious or historical figures, should be announced in some manner. Some voters will test the ballot counting process by writing in a name they believe no one else would write in, and then check to see if that vote was counted. Posting a copy of the worksheet where scattered write-in votes were documented is sufficient if the number of write-ins with few votes are too many to orally announce.

If a town or ward comprises an entire Representative district, the moderator shall declare the state representative(s)-elect. RSA 659:82. Multi-ward or multi-town districts are declared by the Secretary of State.

Across the United States, one area of election administration that is subject to public scrutiny and criticism is the process by which numbers are transmitted from polling place officials to the state officials who determine the official results of regional and statewide contests. One way to reassure suspicious voters is to make the results from each polling place easily accessible at the polling place and locally, so that the voters can compare what you say the results are with the numbers used by the Secretary of State to determine the winner of the regional and statewide races. Therefore, it is recommended that the moderator post a copy of the written results at the polling place on election night and that the clerk keep them available at his or her office following the election.

After all state election ballots have been counted, the Moderator must provide the clerk the election results, and the town or ward clerk must report the results on the Return of Votes forms provided by the

Secretary of State by 8 AM on the day following the state election. Subject to rules established by the city clerk, the ward clerk should send copies to the city clerk. Subject to the request of the Secretary of State, Ballots Cast, Names on Checklist, and Moderators Worksheet(s) (page 170) must be completed with 48 hours after the closing of the polls. The city or town clerk retains a copy of the Return of Votes, Ballots Cast Form, Names on Checklist, Moderator's Certificate, Moderator's Worksheet, as well as tally sheets and reconciliation worksheets. Moderators should keep copies of these documents to answer any questions following the election. RSA 652:14-c; RSA 659:73; RSA 659:75.

SEALING AND CERTIFYING BALLOTS

Ballots must be sealed immediately after the votes at a state election have been tabulated, the results have been announced, and the return prepared. The moderator or his or her designee, in the presence of the selectmen or their designee, shall place the:

- Cast ballots;
- Cancelled ballots;
- Uncast ballots;
- Ballots from any additional polling places; and
- Successfully challenged absentee ballots

in containers supplied by the Secretary of State. RSA 659:97.

The moderator or his or her designee shall enter the following information on the label for resealing ballots in the appropriate place: the number of ballots cast, canceled and uncast, and the moderator and selectmen, or their designees, shall endorse the sealer. RSA 659:95; RSA 659:97.

The container shall be sealed in public by the moderator. Use the following steps to seal a cardboard box of ballots for storage:

1. Seal the flaps closed with filament tape.
2. Complete the information on the "Label for Resealing Ballots." See page 152 for an example of this label. Stick this label onto the box over the flaps.
3. Using red tamper-evident tape, wrap one strip of this red tape completely around the box, covering an edge of the resealing label. This security tape changes appearance if it is pulled loose after being sealed, creating evidence that the box has been tampered with.
4. Stick a short strip of the red tamper evident tape over each edge of the "Label for Resealing Ballots."

Moderators, selectmen and clerks are not to seal the copy of the Return of Votes, worksheets, tally sheets, and Challenged Voter Affidavits in the ballot box, as these may be necessary to resolve tabulation questions following election night and investigations of voters who did not present voter IDs. Sealing tally sheets and working papers from the ballot count in the box of ballots prevents a review of the count of votes, since the ballot box cannot be accessed without:

(a) a recount,
(b) a court order, or
(c) a request of the Secretary of State and the presence of a state election official when the box is opened. RSA 659:75.

Apparent errors in the Return of Votes and Ballots Cast figures discovered by the Secretary of State following the election can often be quickly resolved with a high degree of confidence if the moderator and clerk can review their tally sheets and working papers used to reach the numbers reported on the Return of Votes.

DELIVERY OF BALLOTS & CHALLENGED VOTER FORMS TO CLERK

The moderator, or his or her designee, and the selectmen, or their designee, having publicly sealed and certified the state election ballots shall deliver the sealed containers to the town or city clerk, or his or her designee. The clerk shall, in their presence, enter the time and his or her signature on the sealer. RSA 659:98.

The moderator, or his or her designee, shall deliver the Challenged Voter Affidavits and Asserting a Challenge forms to the town or city clerk, or his or her designee. RSA 659:13; RSA 659:103; HAVA Section 703.

REPORTING WRONGFUL VOTING

The moderator has the responsibility to report any violations of RSA 659:34 through RSA 659:49 to the Attorney General's Office. RSA 659:45. Phone calls should be placed to 1-866-868-3703 (toll free). A written statement or report will usually be requested and the report should be mailed to Office of the Attorney General, 33 Capitol Street, Concord, New Hampshire 03301-6397. At State elections the Attorney General's Office generally has several attorneys and investigators working around the State who are available to respond on short notice to a polling place. It is often much easier to address concerns with voting procedures or questions about a voter's qualifications on election day while the polls are open than to address the issue after election day.

OPTIONAL COUNTING OF VOTES AT ADDITIONAL POLLING PLACE

The moderator may, in writing, order the assistant moderator to process absentee ballots and to count votes cast at the additional polling place in the presence of and with the assistance of the assistant town clerk and election officers assigned to that polling place, in the same manner as at the central polling place. After absentee ballots are processed and counting is complete, the assistant moderator shall place the:

- Counted ballots;
- Duplicate checklists used at the additional polling place;
- Absentee envelopes;
- Spoiled ballots; and
- Unused ballots

in the ballot box and shall seal it, and the assistant town clerk shall certify the same. The assistant moderator with the assistant town clerk shall immediately deliver the ballot box with its contents and a written report of the count signed by both to the moderator at the central polling place. RSA 659:59.

Polling places that use ballot counting devices should be directed by the elected moderator to produce the tape reporting the totals cast at that polling place and then "end" the process before moving the device, ballots, and the tape to the central polling place. The results at the additional polling places should be reported. The sealing and transportation should be done by more than one election officer. At partisan elections, at least one election officer affiliated with

each party should be allowed to witness the sealing and transportation.

At the central polling place, the elected moderator will oversee tallying of the votes from all polling places and will announce the results.

POST-ELECTION DAY

RECOUNT (TOWN ELECTION)

The moderator along with the town clerk and board of selectmen constitute the board of recount and shall recount the ballots. If one of the board of recount is a candidate for the office being recounted, the moderator shall appoint an assistant to serve in the same capacity. RSA 669:32. The statute does not explicitly authorize the moderator to appoint other election officers to assist the board of recount, however, it is common practice for moderators to do so.

RECOUNT (SCHOOL ELECTION)

The board of recount in a school district election is made up of the school district clerk, the school district moderator, and the members of the school board. RSA 671:32 II. As with town recounts it is common for the moderator to appoint election officials to assist the board of recount.

RECOUNT PROCEDURES

The process to be used in conducting the recount is left to the discretion of the Board of Recount. The Secretary of State has adopted rules of procedure for recounts. Boards of recount may wish to consider adopting those rules.

ADVANCE WRITTEN NOTICE TO CANDIDATES

Every candidate for the office(s) that is going to be recounted and each of the persons who have requested the recount of a question shall be sent a written notice.

The clerk, ideally in coordination with the board of recount, sets the date, time, and location for the recount.

The notice should include a written description of the process the board of recount plans to use to conduct the recount. If the process is going to involve the use of more than one team of officials counting, the notice should state the maximum number of teams anticipated. It should advise that the candidates or persons requesting the recount must have a sufficient number of assistant observers present to observe each counting team. If they fail to have an observer for each team, they waive the opportunity to do so. The notice should state that each observer will be afforded an opportunity to see, but not touch or handle, each ballot. That will be the one opportunity the observer will have to protest how that ballot is being counted. If the observer wishes to protest how the recount team is counting a particular ballot he or she needs to do so at the moment in time when that ballot is being counted by the team.

A system should be adopted to identify each ballot that any observer protests. Typically these ballots are segregated into a separate pile at each counting location.

At some point, typically after all ballots have been examined and counted by the team(s), but before the team tallies are totaled, all the protested ballots should be ruled on by the board of recount. By ruling on protested ballots before the team tallies are totaled the decision on each protested ballot is made before it is known whether the decision will affect the outcome of the election. This reinforces the neutrality of the counting process.

The intent of the voter for each protested ballot is determined by a majority vote of the members of the board of recount. RSA 659:64. If the majority of the board of recount determines that a ballot should be counted as a vote for a particular candidate, that vote, even if the ballot is further protested, must be added to that candidate's total votes.

The candidates or the persons requesting the recount of a question must then be given an opportunity to protest the decision of the board of recount. When the board's decision is protested, the board of recount should adopt some system to document how it ruled on each ballot. Even though the ballot will be marked, the vote from that ballot as determined by the board of recount must be included in the total of votes credited to the candidate. Typically only the ballots protested as this second step will be examined by a court hearing an appeal of the recount. The system used to document the board's decision and to identify the ballot as a protested ballot should not add marks to the ballot or alter the ballot in any way that might affect the ability of a court on appeal to examine the marks made on the ballot by the voter.

One approach is to staple a sequentially numbered piece of paper to each protested ballot, writing on the paper the board's decision. Write on the paper either the name of the candidate(s) who is credited with a vote from the ballot or the word "yes" if the ballot is to be credited as a yes vote on a question or the word "no" if the ballot is to be credited as a no vote on a question.

Appeals from decisions made by a board of recount typically should be limited to disputing the Board's decision on how particular ballots were counted. Protested ballots should be preserved with the other ballots from the election, but segregated so that the clerk can produce specific protested ballots for review by the court hearing the appeal.

RULES OF ORDER

Moderators control election and meeting day activities. Some moderators find it helpful to adopt rules of order. Established systems of rules such as Robert's Rules of Order generally are too complex and afford too much opportunity for individuals with extensive knowledge of the rules to gain unfair advantage. A simple set of rules may be more helpful. Some moderators announce the rules and post them at the meeting place. The rules should always include notice to the voters that they may by motion seek to overturn decisions made by the moderator. Voters who believe the moderator has made a procedural error, is cutting off debate prematurely, or has made a mistake in declaring a result should have notice that they need to immediately put the moderator on notice through a motion to overrule the moderator or in the case of the declaration of a vote, a motion for a paper ballot vote. When complaints of procedural errors by a moderator are reviewed by the Attorney General's Office, additional deference to the moderator is shown when the record of the meeting establishes that the complaining party had notice of his or her right to move to overrule the moderator or for a paper ballot vote on a question.

IX. DUTIES OF SUPERVISORS OF THE CHECKLIST

The term "supervisors of the checklist" shall include any board of registrars or similar body performing the functions of registering voters and correcting the checklist in cities. RSA 652:15.

VOTER REGISTRATION FORM

RSA 654:7 sets forth a voter registration form, which includes a section explaining domicile.

A copy of the form needs to be made and sent to election officials from that jurisdiction when a new voter was most recently previously registered in another New England state. Electio*Net*, also known as the Statewide Voter Registration System, currently will notify a New Hampshire municipality where the voter was previously registered, so there is no need to send a copy of the form to New Hampshire municipalities.

STANDARD OF PROOF

The supervisors of the checklist determine whether an applicant is qualified to register to vote. The supervisors of the checklist act in a quasi-judicial* capacity and are obliged by law to act impartially based on the evidence before them and facts known to them. The decisions made by the supervisors of the checklist are subject to review by the Superior courts.

**The term "quasi-judicial" in this context means having a partly judicial character by possession of the right to hold meetings and conduct investigations as to qualifications of voters. An applicant may file a complaint with the superior court stating that his name has been illegally kept from the checklist and asking to have his or her name added thereto. RSA 654:14; RSA 654:42.*

It is important that any decision to reject an applicant be appropriately documented and that the rejected applicant receives proper notice of the decision.

RSA 654:11 establishes the standard of proof or test to be used by the supervisors when deciding if an applicant is qualified to vote. The standard of proof is the standard of proof that will be applied by the courts if the supervisors' decision is appealed.

If there is contradictory evidence or questionably sufficient evidence before the supervisors regarding any particular candidate's identity, age, citizenship or domicile qualifications, RSA 654:11 creates a presumption that the applicant is qualified to vote and authorizes the supervisors of the checklist to reject the application only if they conclude that it is **more likely than not** that the applicant is not qualified.

Stated in other terms, if the evidence that the person is not who he or she claims to be, will not be age 18 on election day, is not a United States citizen, or is not domiciled in the town or city ward where he or she seeks to register is of greater weight than the evidence that he or she is qualified, then it is proper to deny the application.

This standard is also sometimes referred to as a preponderance of the evidence standard of proof. Stated a third way, supervisors should reject an application if the evidence as a whole shows that it is more probable than not that the applicant is not who he or she claims to be, will not be 18 on election day, is not a United States citizen, or is not domiciled in the town or city ward where he or she

seeks to register and vote. Decisions must be made by a majority vote of the supervisors.

Application to Supervisors. *When the supervisors of the checklist receive a registration form from the town or city clerk or when an applicant submits the form to said Board of Supervisors in person at a session for the correction of the checklist, the Board of Supervisors of the checklist shall cause his or her name to be added to the checklist, unless it is established that it is more likely than not that the applicant is not qualified to vote in the city or town under RSA 654:1 through RSA 654:6. All decisions of the Board of Supervisors of the checklist shall be made by majority vote thereof." RSA 654:11*

A chart on page 180 summarizes the types of documentation authorized for voter registration.

PROOF OF IDENTITY

The applicant must prove his or her identity during the application process. If a person has any one of the following in his or her immediate possession, he or she must present it when applying for registration:

(1) Photo driver's license issued by any state or the federal government
(2) United States passport, armed services identification, or other photo identification issued by the United States government.
(3) Photo identification issued by local or state government.

These forms of identification are considered presumptive evidence of the identity of an applicant. RSA 654:12,II(b)

The supervisors of the checklist may approve other forms of photo ID that they deem to be reasonable. RSA 654:12, II, III

A person who does not have one of the approved photo identifications described above may establish identity through the completion, in a General Election, of Page 2 of the Voter Registration Form for General Elections (page 140) or, in other elections, a Qualified Voter Affidavit (page 141). RSA 654:12.

A driver's license from another state is presumptive proof of identity, but not of domicile in New Hampshire. Unless you have evidence that contradicts the proof of identity offered by the driver's license, you must accept it as proof of identity. This means the person can then swear or affirm a domicile or qualified voter affidavit. Generally you must accept a properly executed affidavit. RSA 654:12.

NURSING HOME RESIDENTS

Residents of a nursing home or similar facility who no longer possess the usual forms of identification, may prove their identity through verification by the administrator of the facility or his or her designee. If an applicant for voter registration proves his or her identity by having it verified by a nursing home administrator, that registration will be treated in the same manner as would a registration where the applicant proved his or her identity with qualified photo identification. RSA 654:12.

PROOF OF DOMICILE

The New Hampshire and United States Constitutions establish that every person who is not disqualified from voting has a right to vote somewhere. A person can be disqualified due to being under age, being a convicted felon who is currently

incarcerated for that conviction, being a person who has been convicted of a willful election law violation, or not being a citizen of the United States. Otherwise, the person has a right to vote somewhere. Domicile analysis should be about where the person votes, not if the person votes.

A major responsibility faced by local election officers is conducting elections in a manner that encourages voting – making the process quick, easy, and fair to all – while at the same time ensuring that the outcome of elections are not illegally influenced by unqualified persons voting.

Procedures that make voting easy inherently also make voting fraud easier. Procedures that detect and deter voting fraud by their nature make it more complex and time consuming to register and vote. Local election officials must strive to attain the proper balance between these competing interests.

The determination of whether a person is domiciled in the town or ward where he or she seeks to vote is a challenging but critical part of conducting lawful, fair elections that encourage voting.

RSA 654:1, I. The law on domicile provides:

RSA 654:1 Voter; Office Holder.

I. Every inhabitant of the state, having a single established domicile for voting purposes, being a citizen of the United States, of the age provided for in Article 11 of Part First of the Constitution of New Hampshire, shall have a right at any meeting or election, to vote in the town, ward, or unincorporated place in which he or she is domiciled. An inhabitant's domicile for voting purposes is that one place where a person, more than any other place, has established a physical presence and manifests an intent to maintain a single continuous presence for domestic, social, and civil purposes relevant to participating in democratic self-government. A person has the right to change domicile at any time, however a mere intention to change domicile in the future does not, of itself, terminate an established domicile before the person actually moves.

II. Any elected or appointed official for whom one of the qualifications for his or her position is eligibility to be a voter in the area represented or served shall be considered to have resigned if the official moves his or her domicile so that he or she can no longer qualify to be a voter in the area represented or served. Any vacancy so created shall be filled as prescribed by law.

RSA 654:2 Temporary Absence. A domicile for voting purposes acquired by any person in any town shall not be interrupted or lost by a temporary absence therefrom with the intention of returning thereto as his or her domicile. Domicile for the purpose of voting as defined in RSA 654:1, once existing, continues to exist until another such domicile is gained. Domicile for purposes of voting is a question of fact and intention. A voter can have only one domicile for these purposes. No person shall be deemed to have lost a domicile by reason of his or her presence or absence while the voter or his or her spouse is employed in the service of the United States; nor while engaged in the navigation of the waters of the United States or of the high seas; nor while a teacher in or student of any seminary of learning; nor while confined in any public prison or other penal institution; nor while a patient or confined for any reason in any nursing,

convalescent home or hospital, old folks or old age home, or like institution or private facility.

A person can only have one domicile for voting purposes and it is the one place, more than any other, where the individual has established a physical presence.

The supervisors are to look at the applicant's manifestations of intent to maintain a single, continuous presence for domestic, social, and civil purposes relevant to participating in democratic self-government. Manifestations of such intent may include:

- Where the person owns or rents property that they primarily live in;
- Where he or she conducts other business with government;
- Where he or she sends children to school;
- Where he or she registers motor vehicles;
- Where he or she registers a dog;
- The location he or she lists as a residence on a driver's license and/or vehicle registration,
- Where he or she tells the United States Postal Service to deliver mail that must be signed for in person;
- Where he or she keeps most personal property, etc.

It is **not mandatory** that a person prove any one or more of these manifestations of domicile in a particular town or ward to be qualified to vote there. Each, however, is evidence of where a person's one voting domicile is located.

New Hampshire does not impose a requirement that a person have lived at his or her new domicile for any period of time before being eligible to register and vote. The domicile provision does not prevent a person from moving to a New Hampshire town or ward and voting on the same day he or she moves into the new town or ward.

To provide guidance for the determination of domicile and to make the process of registering to vote easy and quick for most applicants, the law establishes certain documents as **presumptive** proof of being qualified as a voter.

RSA 654:12 Determining Qualifications of Applicant.

. . .

II. The Board of Supervisors may refuse to add the name of an applicant to the checklist if he or she fails to present the evidence or an affidavit as required by this section. Without limiting the acceptance of other forms of proof of domicile or identity deemed reasonable by the Board of Supervisors:

(a) Any one of the following documents is presumptive evidence that the individual seeking to vote meets the domicile requirement, provided the document is currently valid, was issued to or in the name of the applicant, and shows the address the applicant claims as a domicile:

(1) New Hampshire driver's license.

(2) New Hampshire vehicle registration.

(3) Armed services identification, or other photo identification issued by the United States government

These documents are presumptive only. The ultimate decision to accept or reject the application lies with the supervisors of the checklist or, in cities, with the registrars. (References to the supervisors

apply equally to registrars who serve the same role in the cities.) Provided the supervisors possess evidence that, in their judgment, makes it more likely than not that the applicant is not domiciled where shown on one of these presumptive documents, the supervisors may vote to reject the applicant. RSA 654:12, II(c). It is expected, however, that most applicants will possess one of these documents and will be able to register quickly and conveniently.

The law requires that the supervisors of the checklist, or the clerk acting as their agent, **shall** require the applicant to present proof of identity, citizenship, age, and domicile. However, the law continues to give the supervisors broad discretion as to what, in addition to the presumptive documents, they choose to accept. The supervisors may accept, and by inference may not reject, any reasonable documentation to prove identity, age, citizenship, and domicile.

RSA 654:12 Determining Qualifications of Applicant.

"I. When determining the qualifications of an applicant, the Board of Supervisors of the checklist, or the town or city clerk, ***shall*** *require the applicant to present proof of citizenship, age, and domicile, as provided in the following categories:"*

In the event an applicant cannot produce the proof necessary to qualify as a voter, the law also sets forth the forms of an affidavit that the person can use in lieu of other proof of his or her identity, domicile, or citizenship. See an example of the Qualified Voter Affidavit on page 141 and the Domicile Affidavit on page 142, and Page 2 of the Voter Registration Form for use in the State General Election" on page 140.

In an effort to deter voting fraud and to make prosecution of voting fraud more feasible, the affidavits explicitly require the applicant to swear or affirm the truth of his or her written statements in front of a election officer (moderator, deputy moderator, assistant moderator, town clerk, deputy town clerk, city clerk, deputy city clerk, ward clerk, selectman, supervisors of the checklist, registrar, or deputy registrar), notary public or justice of the peace.

PROOF OF IDENTITY FOR THE PURPOSE OF SWEARING AN AFFIDAVIT

RSA 654:12, II (b) establishes a list of documents which are presumptive proof of identity. These documents need not be currently valid, may show an address in another town/city or even state, but are adequate to establish identity for the purposes of swearing or affirming an affidavit.

RSA 654:12 Determining Qualifications of Applicant.

. . .

"(b) Any one of the following is presumptive evidence of the identity of an applicant sufficient to satisfy the identity requirement for an official authorized by RSA 659:30 to take the oath of an applicant swearing to a qualified voter, domicile, or election day (registration form) affidavit:

(1) Photo driver's license issued by any state or the federal government.

(2) United States passport, armed services identification, or other photo identification issued by the United States government.

(3) Photo identification issued by local or state government."

As was the case with the documents established as presumptive proof of domicile, these documents can be rejected as proof of identity if the election official has evidence that contradicts them. It is necessary that the contradictory evidence make it more likely than not that the person is not who he or she claims to be.

Supervisors may accept any other form of photo ID that they deem reasonable as proof of identity. The purpose of the statute is to require an applicant who arrives to register to vote without proof of his or her qualifications to register and vote provided he or she can establish his or her identity and is willing to sign an affidavit(s) under penalty of law.

The process is made more formal in order to ensure the applicant understands the importance of the process and to provide a record of who took the oath to aid in prosecution should it later be established that the affidavit was not true.

The affidavit forms each require the affiant, the applicant, to swear to an election official, notary or justice of the peace who must then himself or herself sign the form attesting to having taken the oath. See Qualified Voter Affidavit on page 141 and Domicile Affidavit on page 142, and Page 2 of the Voter Registration Form for General Elections, page 140.

As a general practice, supervisors should **only accept** voter registration affidavits if they have been signed **in their presence at the supervisor's request**. This will help the state avoid mailing follow-up letters to those voters whose affidavits were not requested by a supervisor of the checklist.

If supervisors find themselves receiving affidavit forms they have not asked for and do not require for voter registration, it is recommended that they communicate with those individuals who are generating them. The purpose is to obtain and record in Electio*Net* forms that are needed for voter registration, nothing more nor less.

If voters submit unnecessary affidavits during voter registration, supervisors are encouraged to note this fact in the "For Official Use" box on the front page of the voter registration form, and to subsequently enter in Electio*Net* only those affidavits that they deemed necessary for voter registration.

APPLICANTS MUST PROVIDE PROOF OF QUALIFICATIONS

RSA 654:12 requires all applicants to provide proof of their qualifications as voters to the supervisors or the clerk.

DETERMINING QUALIFICATIONS OF APPLICANT

When determining the qualifications of an applicant, the supervisors of the checklist, or the town or city clerk, shall require the applicant to present proof of citizenship, age, and domicile.

Any person whose name is not on the checklist but who is otherwise a qualified voter shall be entitled to vote by requesting to be registered to vote at the polling place on election day. The voter may then vote at that election. The applicant shall be required to produce appropriate proof of qualifications as provided in RSA 654:12.

While it is mandatory that some proof of qualifications be produced, the supervisors and the clerks, acting in accordance with the supervisor's

guidelines, can approve reasonable documentation to establish the voter's qualifications with respect to identity, age, citizenship and domicile. RSA 654:8 The identity, age, citizenship, and domicile requirements in RSA 654:12 includes the term "reasonable" to describe the proof or documentation required. Furthermore, the state and federal constitutions still require that anyone not disqualified as a voter (under age, incarcerated felon, etc.) must be allowed to vote somewhere. It is inherent in this requirement that an individual whose lifestyle does not allow or anyone who chooses not to have a driver's license, not to register a vehicle, not to purchase utility services, etc., must have some method available by which to prove his or her domicile.

The statute that establishes the requirement that a person must be domiciled in the state to hold elected office provides that "Registration to vote or voting in another state during the relevant time period shall create a presumption that a person does not have a domicile in this state." RSA 655:2.

INCARCERATED FELONS

A person sentenced to prison for a felony, from the time of imposition of his sentence until his final discharge, may not vote unless the sentence is suspended or the individual is paroled. A person sentenced for a felony to a suspended sentence and/or probation, who never is incarcerated in prison does not lose his or her right to vote. An individual sentenced for a felony forfeits any office held at the time of sentencing and may not become a candidate for or hold public office until the sentence is finally discharged. RSA 607-A:2; RSA 654:5.

People confined in a penal institution in pre-trial detention or as a result of a conviction for a misdemeanor retain the right to vote. Most people sentenced to County Corrections fall in this category. Their domicile for voting purposes is the town or city where they had their domicile immediately prior to being confined. Persons confined in a penal institution must vote by absentee ballot. RSA 654:2-a.

The Secretary of State forwards communications from different official sources to local jurisdictions that contain evidence of incarcerations for felonies. Some of these persons' terms of incarceration have already been served. When notified of a voter's <u>current</u> felony incarceration, supervisors of the checklist should remove the individual from the checklist. Supervisors should take time to identify the period of incarceration and use it to assess whether a person has served time for a felony and is again eligible to register and vote.

Any person convicted of bribery or intimidation relating to elections or any willful violation of the election law is forever disqualified from voting, seeking or holding public office. New Hampshire Constitution, Part 1, Article 11; RSA 654:6. This means a person purposefully voting twice in one election, otherwise purposely committing voter fraud, purposely committing voter intimidate crimes, or purposely engaging in unlawful voter suppression may, in addition to paying a fine and/or going to prison, may lose his or her right to vote for life. The right to vote can only be reinstated by the Supreme Court.

STUDENT VOTERS

Students should be treated like any other person applying for registration or, if already registered, seeking to vote. To become registered the applicant will have to sign, under penalty of voting fraud, the registration form that includes the phrase "and if registering on election day,

that I have not voted and will not vote at any other polling place this election." RSA 654:7. If an election official, another voter qualified to vote in the polling place, or a challenger appointed in writing by the state political party has evidence that a person has already voted in the election, by absentee ballot or otherwise, they may make a voter challenge with the moderator. After the election any evidence that a person voted in one town by absentee ballot and in a second in person should be reported to the Attorney General's Office. It is a felony to vote in the same election in New Hampshire and in some other state.

ABSENTEE REGISTRATION FOR NON-UOCAVA VOTERS

Any person who is qualified to register to vote, but who is unable to register in person in advance of the election may register to vote absentee, through the mail. RSA 654:16; RSA 654:17. Applicants are required to send copies of the documents that they rely on as proof of their qualifications as a voter.

RSA 654:17 Absentee Registration Affidavit

. . .

4) That I hereby enclose one of the following as proof of identity and domicile:

(a) A copy of a current and valid New Hampshire driver's license or an armed services identification or other photo identification issued by the United States government that shows the name and address of the voter; or

(b) A copy of a current and valid photo identification and a copy of a current utility bill, bank statement, government check, paycheck, or other government document that shows the name and address of the voter;

5) That I acknowledge that if I do not provide a copy of proof of identity and domicile as required by section 4) above, this application may not be approved;. . .

Persons attempting to register absentee are not permitted to sign Domicile Affidavits, Qualified Voter Affidavits, or the Voter Registration Form, except that they are eligible to sign affidavits affirming absence or disability**.** RSA 654:17.

UNIFORMED AND OVERSEAS CITIZENS (UOCAVA)

There are three general categories of Uniformed and Overseas (UOCAVA) voters in State law: Refer to FPCA (page 136) Section 1 (Classification) and images below.

(a) Uniformed services voters (members of all the active-service military branches, including the Merchant Marine), and the spouses or dependents of any of the above. A uniformed services voter, **regardless of whether he or she has a domestic or foreign address,** have the right to vote in any election in the town or city in which he or she had his or her domicile immediately prior to his or her departure. RSA 654:3. See Federal Post Card Application form on page 136.

This "military service" category includes the 1st and 2nd lines on the FPCA form. The 2nd line applies to "activated National Guard member on state orders".

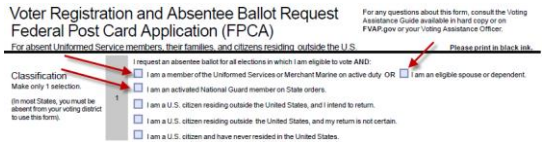
Voter Registration and Absentee Ballot Request
Federal Post Card Application (FPCA)
For any questions about this form, consult the Voting Assistance Guide available in hard copy or on FVAP.gov or your Voting Assistance Officer.
For absent Uniformed Service members, their families, and citizens residing outside the U.S.
Please print in black ink.
Classification
Make only 1 selection.
(In most States, you must be absent from your voting district to use this form).
I request an absentee ballot for all elections in which I am eligible to vote AND:
I am a member of the Uniformed Services or Merchant Marine on active duty OR
I am an eligible spouse or dependent.
I am an activated National Guard member on State orders.
I am a U.S. citizen residing outside the United States, and I intend to return.
I am a U.S. citizen residing outside the United States, and my return is not certain.
I am a U.S. citizen and have never resided in the United States.

(b) Absent voters residing outside the United States. Any absent voter residing outside the U.S. borders and intending to return shall have the right to vote absentee in any election in the town or city in which he or she had his or her domicile immediately prior to his or her departure. RSA 654:3. See Federal Post Card Application form on page 136.

This "intend to return" category applies to the 3rd choice on the FPCA.

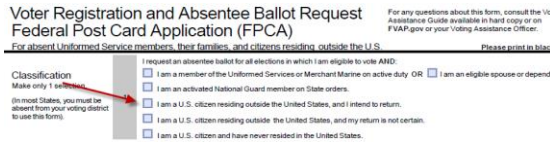
Voter Registration and Absentee Ballot Request
Federal Post Card Application (FPCA)
For absent Uniformed Service members, their families, and citizens residing outside the U.S.
Classification
(In most States, you must be absent from your voting district to use this form).
I request an absentee ballot for all elections in which I am eligible to vote AND:
I am a member of the Uniformed Services or Merchant Marine on active duty OR
I am an eligible spouse or depend
I am an activated National Guard member on State orders.
I am a U.S. citizen residing outside the United States, and I intend to return.
I am a U.S. citizen residing outside the United States, and my return is not certain.
I am a U.S. citizen and have never resided in the United States.

(c) Federal Office Only (FOO) voters: Any United States citizen residing outside the United States who does not intend to return. These voters, if they are otherwise qualified to vote, have a right to register absentee and vote absentee <u>only</u> in federal elections in the town or city in New Hampshire in which they, or a parent or legal guardian (if they have never lived in the United States), had their domicile immediately prior to departing the United States. RSA 654:3. See Federal Post Card Application form on page 136.

This FOO category encompasses the 4th and 5th choice in the FPCA form.

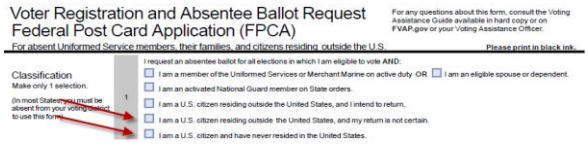
Voter Registration and Absentee Ballot Request
Federal Post Card Application (FPCA)
For any questions about this form, consult the Voting Assistance Guide available in hard copy or on FVAP.gov or your Voting Assistance Officer.
For absent Uniformed Service members, their families, and citizens residing outside the U.S.
Please print in black ink.
Classification
Make only 1 selection.
(In most States, you must be absent from your voting district to use this form).
I request an absentee ballot for all elections in which I am eligible to vote AND:
I am a member of the Uniformed Services or Merchant Marine on active duty OR
I am an eligible spouse or dependent.
I am an activated National Guard member on State orders.
I am a U.S. citizen residing outside the United States, and I intend to return.
I am a U.S. citizen residing outside the United States, and my return is not certain.
I am a U.S. citizen and have never resided in the United States.

ABSENTEE REGISTRATION FOR UOCAVA VOTERS

The Federal Post Card Application (FPCA), when signed, is a voter registration application form, and identifies the UOCAVA category of the voter. RSA 654:20. The town or city clerk shall forward a copy of all FPCA forms to the supervisors of the checklist. RSA 657:19-a. Upon receipt of a return envelope from an unregistered UOCAVA individual, the clerk shall open and retain the envelope and copy and deliver the affidavit envelope and any other registration materials to the supervisors of the checklist. RSA 657:21. See FPCA form on page 136. Recommended procedure:

- If not registered, the clerk or supervisors should enter the voter record in Electio*Net* as "Pending" approval.
- If registered, update any voter information in ElectioNet found on the FPCA form.

Supervisors are required to indicate on the checklist if a Federal Office Only voter [voter residing outside the United States and does not intend to return] is entitled to vote for federal offices only. RSA 654:23. This is accomplished by entering the domicile address as "Overseas Citizen Federal Office Only." Refer to Electio*Net* FAQs.

MILITARY TERM - "HOME OF RECORD"

For voting purposes, the home of record is the town in which the person was domiciled when the person entered the armed services.

WHEN A CHILD BORN OUTSIDE THE UNITED STATES WITH A PARENT WHO IS A CITIZEN AUTOMATICALLY BECOMES ELIGIBLE TO VOTE IN NEW HAMPSHIRE

Any U.S. citizen who is 18 years of age, is domiciled outside the United States, has the right to vote for federal offices in the town or city in New Hampshire in which he or she, or a parent or legal guardian of said voter, had his or her domicile immediately prior to his or her departure from the U.S. RSA 654:3 III.

Hence, clerks may receive voter registration applications (often FPCAs) from individuals (whose parents or legal guardians once lived in their town) who themselves have never lived in the town or elsewhere in the United States and yet deserve to vote somewhere because they are U.S. Citizens. If a clerk can confirm their parents or legal guardians had their domicile in town immediately prior to their departure and the applicant has not lived elsewhere in the United States, they should be registered to vote.

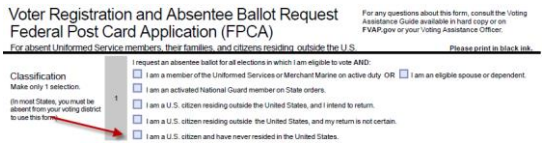
Voter Registration and Absentee Ballot Request
Federal Post Card Application (FPCA)
For absent Uniformed Service members, their families, and citizens residing outside the U.S.
For any questions about this form, consult the Voting Assistance Guide available in hard copy or on FVAP.gov or your Voting Assistance Officer.
Please print in black ink.
Classification
Make only 1 selection.
(In most States, you must be absent from your voting district to use this form.)
1
I request an absentee ballot for all elections in which I am eligible to vote AND:
I am a member of the Uniformed Services or Merchant Marine on active duty OR
I am an eligible spouse or dependent.
I am an activated National Guard member on State orders.
I am a U.S. citizen residing outside the United States, and I intend to return.
I am a U.S. citizen residing outside the United States, and my return is not certain.
I am a U.S. citizen and have never resided in the United States.

UOCAVA ABSENTEE BALLOT APPLICATIONS

FPCAs are honored as absentee ballot applications applying to all elections held during the full calendar year in which they are received, except that FPCAs received in the calendar year prior to the year of the presidential election shall be honored through the presidential primary. RSA 657:19-a.

ABSENTEE BALLOT REQUEST – PERSON NOT REGISTERED

Upon receiving an absentee ballot request from an unregistered voter, a clerk is authorized by law to send the unregistered person a ballot, a written notice of what he or she needs to do to get registered and the forms necessary for the applicant to get registered. The instructions should clearly indicate that the voter registration form and any supporting documents should be put in the outer envelope, not in the affidavit envelope, when returned to the clerk. The clerk needs to mark the absentee ballot affidavit envelope with the words "Not Registered" to ensure that, if the person returns the envelope, a determination can be made whether the person has submitted the documents necessary to become registered as a voter.

At the polls on election day, if an outer envelope is returned without the forms and documents necessary to complete the voter's registration, the inner affidavit envelope should be opened to determine if it contains the documents necessary for registration. The ballot should not be removed from the envelope and should remain folded. If the envelope does not contain the missing registration forms or documents, the envelope should be immediately sealed with staples or tape, with the unexamined ballot still inside. The clerk should write a short explanation on the envelope. The envelope is then treated in the same manner as a rejected absentee ballot envelope. RSA 654:13.

INFORMATION TO CLERK

The Supervisors of the Checklist shall furnish the town or city clerk, upon his or her request, the information the clerk needs to determine the proper ballot to be sent to an absentee voter. RSA 657:14.

ABSENTEE VOTER REGISTRATION

A person desiring to register to vote who is temporarily absent or is a person with a disability may register using a special Absentee Voter Registration Form. RSA 654:16.

CHECKLIST STANDARDS

Information required to be maintained by the supervisors includes: completed registration form and checklists in alphabetical order, both of which are updated after each election. RSA 654:25.

TIMELY ENTRY OF NEW VOTERS AND CHANGES

To avoid confusion, supervisors of the checklist are responsible to ensure that new voters are entered into Electio*Net* in a timely manner, and to approve pending removals and pending approvals before providing copies of the checklist to the public. If it is necessary to provide an un-corrected checklist to satisfy the requirement of the Right-to-Know law that a public record that is immediately available must be provided immediately, the recipient should be advised in writing that there are pending corrections to the checklist.

CHECKLIST CHANGES; REMOVAL OF NAMES

The name and address of a voter shall not appear on the checklist at the request of the voter if he or she presents to the supervisors of the checklist a valid protective order pursuant to RSA 173-B, or if he or she is a confidential voter under RSA 7:46. The name, domicile address, and mailing address, if different, of such a voter shall be maintained on a separate list of voters, which shall be non-public and not subject to RSA 91-A. If it is necessary to establish such a non-public list, the public checklist shall be marked at the end with a notation of the number of voters whose names are maintained on the non-public list. RSA 654:25.

The supervisors should remove the name of any person who relinquished his or her U.S. citizenship or domicile in the community.

A domicile for voting purposes, however, is not lost because a voter is temporarily absent from his or her home. RSA 654:2. Prior to removing a voter from the checklist, the supervisors must send written notice by mail at least 30 days in advance. RSA 654:44.

Upon receipt of a report of transfer from another community or state, reporting that a voter has registered in another community, the supervisors should remove that name from the checklist. RSA 654:36; RSA 654:37; RSA 654:44.

Supervisors shall also either remove a person's name from the checklist or send the person a 30 day notice letter if notice is received from the United States Post Office, the Department of Safety, directly or through Electio*Net* that the person has permanently moved from the town or ward where he or she is registered to vote. RSA 654:36-b.

Mail sent to a voter at the mailing address the voter last provided which is returned by the United States Postal Service indicating that the person has moved should trigger removal of the person's name from the checklist. If the Supervisors have reason to believe the notice is in error, then a 30 day letter should be sent to the voter before removal of the voter's name from the checklist.

REMOVAL OF DECEASED VOTERS

The supervisors should remove the name of any person for whom they have received an official notice of death. While RSA 654:37 does not define "an official notice of death," supervisors should consider such an **official notice** to be:

a) copy of a death certificate,

b) burial permit, or

c) "Voter Checklist" report generated by the clerk from New Hampshire Vital Records Information Network ("NHVRIN").

While the following are not official notices, supervisors should treat them as **follow-up triggers**:

a. Obituary

b. Word of Mouth

When supervisors notice these triggers, they should follow up with these **actions:**

a. Have you seen a burial permit?

b. Have you seen a death certificate?

Clerks should run the "Voter Checklist" report from NHVRIN as follows:

a. Routinely generate the "Voter Checklist" report from NHVRIN and give it to the supervisors of the checklist.

b. Run NHVRIN report with a start date of 30-days prior to the date when the last report was generated.

c. A "Voter Checklist" report should be generated from NHVRIN immediately prior to every scheduled public session of the supervisors of the checklist.

d. Election Day:

- A "Voter Checklist" report should be run on the day before every election.

- Such reports generated for election day should be given to the supervisors on the day of the election.

- Upon reviewing and acting to remove a deceased voter on the day of an election, the supervisors should note on all copies of the official checklist that the voter has been "removed" and then place their initials next to the voter's name.

PARTY AFFILIATION CHANGES

A voter may change his or her party affiliation any time the supervisors are in session, except between the first day of the filing period for a primary up to the day of the primary election. The Board of Supervisors must hold at least one meeting prior to the filing period for the change of registration of legal voters. RSA 654:34.

CHECKLIST CHANGES; CHANGE OF ADDRESS

If a voter has changed their address on the checklist indicating they have moved within their community, the supervisors of the checklist must note the change of address on the person's voter registration

form and enter it in Electio*Net*. RSA 659:13.

SESSIONS - STATE ELECTIONS

The supervisors must hold one session prior to any state election; it must be held on the Saturday 10 days before the election. RSA 654:28. If the session which is to be held on a Saturday falls on a holiday weekend (i.e. Labor Day) then the Board of Supervisors must hold the session on the Tuesday 7 days before the election between 7:00 p.m. and 7:30 p.m. RSA 654:27; RSA 654:28.

The session which is held on the Saturday 10 days prior to election day shall be held as a minimum requirement between 11:00 a.m. and 11:30 a.m. provided, however, that if the Saturday session falls on a holiday weekend, that session shall be held on Tuesday, 7 days prior to the election, between 7:00 p.m. and 7:30 p.m. RSA 654:28.

Before the presidential primary, the session shall be on the day preceding the first day of the filing period, between 7:00 p.m. and 7:30 p.m. and at the discretion of the Board of Supervisors for extended hours. Before the state primary election, the session shall be on Tuesday before the first Wednesday in June between 7:00 p.m. and 7:30 p.m. and at the discretion of the Board of Supervisors for extended hours. RSA 654:32.

The session held on the day immediately prior to the first day of the filing period for candidates for town offices is to be held between 7:00 p.m. and 7:30 p.m. or for a longer period if the supervisors so choose. RSA 669:5.

SESSIONS - PRIMARY ELECTIONS

In addition to the session required above, the supervisors must also hold one session for additions and corrections to the checklist prior to the filing period for state offices or the presidential primary. RSA 654:32.

SESSIONS - LOCAL ELECTIONS

For all town, city, village district and school district elections, the supervisors must hold a session on the Saturday 10 days prior to the election and on the day immediately prior to the first day of the filing period. RSA 669:5; RSA 44:5; RSA 670:3; RSA 671:5.

ADDITIONAL SESSIONS

The supervisors should hold as many meetings as necessary to allow citizens in the community an opportunity to register or change party. Supervisors may meet at any time as long as they post and publish notice of the meeting. RSA 654:32.

POSTING CHECKLISTS

No later than the 4th Tuesday before any state election, the supervisors shall post a current checklist at the town or city clerk's office or at town hall. At least 10 days prior to a session for alteration of party affiliation before a primary, the supervisors shall post a current checklist at the clerk's office or at town hall. Each posted checklist shall state the date, hour, and place of the upcoming session for checklist additions or corrections. RSA 654:26; RSA 654:27; RSA 654:33. On each posted checklist, the Board of Supervisors shall subscribe an oath as required by RSA 654:29.

The official checklist used at any election shall contain the full name, domicile address, mailing address, and party affiliation, if any, of each voter on the checklist. The paper checklists used by ballot clerks on election day need not include mailing addresses. RSA 654:25.

ADDITIONS TO POSTED CHECKLISTS

Except for the additions made on election day, any changes shall be made to the previously posted checklist on or before midnight on the succeeding Friday. Notice shall also be given to the town or city clerk. RSA 654:28.

THE REGISTRATION FORM

The supervisors should make sure they have a sufficient supply of standard Voter Registration Forms for themselves and the city or town clerk. RSA 654:7.

SUBMITTING NOMINATION PAPERS TO SUPERVISORS

Completed nomination papers for third party candidates must be submitted for certification to the supervisors in the community in which the voter is registered no later than 5 p.m. on the Wednesday 5 weeks prior to the State Primary Election. Nomination papers shall be signed and dated in the year of the election. RSA 655:40-a. The supervisors are to verify that the person subscribing the nomination is a registered voter. The supervisors must have the certified nomination papers available for the candidate no later than 5 p.m. on the Wednesday 2 weeks prior to the primary. RSA 655:41-3. They should provide notice of such meetings in a manner consistent with RSA 91-A, which requires that at least two public notices be placed 24 hours prior to the meeting. City clerks may perform the responsibilities of the supervisors of the checklist relating to certification of petitions. RSA 655:41 II.

ADDITIONAL POLLING PLACES

The supervisors must prepare a list of the voters entitled to vote in the additional polling place and no later than 14 days prior to the election they must post a copy at the town or city clerk's office or at the town hall. They must also give the town clerk 2 copies of that checklist. RSA 658:12.

COPIES OF THE CHECKLIST

The supervisors are required to provide copies of the checklist to those who request it. Supervisors are urged to address all pending items that appear in System Reminders of Electio*Net* prior to providing copies of the checklist. However, the Right-to-Know law requires that a public record that is immediately available be provided immediately. A person making a request for a copy of the checklist in person should not be denied because there are pending changes, but they should be informed that the checklist they are receiving is not current. A request received by mail should not be unreasonably delayed while corrections are made.

The Supervisors may only provide checklist information for their own town or city. The supervisors shall charge a fee of $25 for each copy of the public checklist for a town or ward. For public checklists containing more than 2,500 names, the supervisors of the checklist shall charge a fee of $25, plus $0.50 per thousand names or portion thereof in excess of 2,500, plus any shipping costs.

The information on the checklist that supervisors of the checklist may provide upon payment, includes the voter's name, street address, mailing address, town or city, voter history for an election (including whether or not they voted absentee), and party affiliation, if any, of every registered voter in the town or city ward. Date (or any date range) of a voter's registration is not public information. NH Constitution, Part I, Article 8; RSA 654:25; RSA 654:31; RSA 654:31-a; RSA 654:45; RSA 659:13; RSA

659:102. The supervisors of the checklist may provide public checklist information on paper, computer disk, computer tape, electronic transfer, or any other form. RSA 654:31 II. Refer to Electio*Net*/Help/Instructions/Voter Information - Public or Private.

Upon request, the Secretary of State shall provide a list of the name, street address, mailing address, town or city, voter history, and party affiliation, if any, of every registered voter in the state to a political party, political committee, or candidate for county, state, or federal office. In addition, upon request, the Secretary of State shall provide a candidate for county, state, or federal office a list of the name, street address, mailing address, town or city, voter history, and party affiliation, if any, of every registered voter in the candidate's district. The Secretary of State shall charge a fee of $25 plus $.50 per thousand names or portion thereof in excess of 2,500 plus shipping charges. The Secretary of State must charge and collect on behalf of the supervisors of the checklist of each city and town the amount that such supervisors would have charged had the public checklist been purchased from them. The Secretary of State shall remit to the city or town the amount collected on its behalf. RSA 654:31, IV.

It is a crime to knowingly use the checklist information for commercial purposes such as selling or offering for sale any property or service unrelated to an election or political campaign. RSA 654:31. Copies of the checklist should be sold to charitable non-profit corporations that request them.

Except for fees collected on behalf of a city or town, any fees the Secretary of State receives are to be deposited into the election fund that is used for election related purposes such as voter and election official education. RSA 654:31,VI.

The non-public checklist, that is the list of voters who are under protective orders pursuant to RSA 173-B or who are confidential voters under RSA 7:46, may not be provided to anyone, other than law enforcement, without a court order.

ELECTION DAY DUTIES – SUPERVISORS OF CHECKLIST

ATTENDANCE AT ELECTION

Supervisors shall be present at the opening of each election at which a checklist is to be used and shall remain in attendance until the close of the election. RSA 659:10.

MEETING TO REMOVE DECEASED VOTERS

Supervisors are in public session on election day. Prior to the opening of the polls, they should review and, at the opening of the polls, act on the clerk's list of death notices, manually noting on all copies of the checklist that a voter has been removed and placing their initials next to the voter's name.

ELECTION DAY REGISTRATION

Any person qualified as a voter may register to vote with the supervisors on election day at any election. RSA 654:12.

ELECTION DAY PARTY CHANGES

Undeclared voters may, after declaring a party and voting in a primary, sign the list of undeclared voters created in Electio*Net* and provided at the polls to return to undeclared status on election

day. The list shall be retained by the Board of Supervisors. RSA 654:34, II.

No person, who is already registered to vote, whether his or her party membership has been previously registered or not, shall affiliate with a party or disaffiliate from a party between the first Wednesday in June and the day before the state primary election. RSA 654:34, IV.

Voters who have declared an affiliation must change their affiliation before the first Wednesday in June or they are limited to voting in the primary of the party with whom they are affiliated on primary day. A declared voter may change his or her affiliation on primary day, but then he or she may not vote in that primary. RSA 654:34.

PROCEDURE FOR ACCEPTING VOTERS

REQUIREMENTS

Any unregistered person who wishes to vote in any election shall proceed directly to the supervisors of the checklist to register in the polling place. Individuals must be 18 years of age or older and must present proof of identity, age, domicile, and citizenship or complete a qualified voter or Domicile Affidavit at the time of registration.

PROCEDURE

1. Applicant for registration goes to the supervisors of the checklist.

2. Supervisors check to ensure the individual is not already registered and on the checklist.

3. If the individual is already registered to vote, but is not in the correct voting place, the supervisor will direct the individual to the correct town or ward.

4. Applicant presents proof of qualification as a voter for that polling place or completes and swears to/affirms necessary affidavits, which are included on Page 2 of the Voter Registration Form (page 140) that may only be used on the general election day in even numbered years. As a general practice, supervisors should **only accept** voter registration affidavits if they have been signed **in their presence at their request**. This will help the state avoid mailing follow-up letters to those voters whose affidavits were not necessary for voter registration.

5. Either the individual or supervisor fills out a voter registration form by printing legibly, with the voter signing the bottom of the registration form. RSA 654:12

6. Once the registration form is completed, the supervisor directs the voter to the ballot clerk, ensures the name, address, and party affiliation of the voter gets written on the checklist, and notifies the ballot clerks that the individual is now a registered voter. Larger towns and cities may want to adopt a form to be signed by the supervisor that the newly registered voter can carry to the ballot clerk as evidence that he or she is registered. See sample New Voter Authorization Form on page 175.

7. If the voter did not present a photo ID acceptable for

obtaining a ballot, the supervisors should have the voter complete a Challenged Voter Affidavit prior to getting in the voter check-in line.

CHALLENGES

When the identity, age, citizenship, or domicile of a voter is challenged, it is the duty of the supervisors to consider any evidence offered and then to determine if the person is qualified as a voter.

Challenges on other grounds, such as a claim that the voter has already voted in the election, are decided by the moderator.

If the election officials decide that the challenge is valid, that the voter is not qualified, they should educate the voter as to where he or she should be voting or why he or she is not eligible to vote in New Hampshire. A voter whose name is on the checklist may, nonetheless, vote if the voter completes the Challenged Voter Affidavit.

If election officials believe that a voter who is challenged and signs a Challenged Voter Affidavit is nonetheless voting wrongfully, this should be reported to the Attorney General's Office.

If the ground for the challenge to an absentee voter is age, citizenship, or domicile, the supervisors of the checklist must, using an "Asserting a Challenge" form, rule whether or not the challenged voter either is qualified or not qualified. RSA 659:27; RSA 659:27-a; RSA659:30; RSA 659:31; RSA 659:32.

POST-ELECTION DAY DUTIES – BOARD OF SUPERVISORS

PRESERVATION OF CHECKLIST

Within 90 days after the closing of the polls for each regular state general election and each presidential primary election, one marked copy of the check-in checklist used at the election must be forwarded to the State Archives in Concord: State Archives, 71 South Fruit Street, Concord, New Hampshire 03301-2410. Please note that this law does not apply to the state primary. RSA 659:102.

After every election, a marked copy of the checklist must be preserved by the town or city clerk as a public record, for a period of at least 7 years. RSA 33-A:3-a; RSA 659:102.

CORRECTING DATA FILES AND ENTERING INFORMATION FOR STATE FOLLOW-UP LETTERS

After each state election the supervisors shall use the checklist from such election to correct the data in the records of registered voters in Electio*Net*. Supervisors must start by entering voters who registered on election day into Electio*Net* first, indicating if they signed **Page 2 of the Voter Registration Form** in a General Election (page 140), a **Domicile Affidavit** (page 142) and identifying those who signed a **Qualified Voter Affidavit** (page 141) **for purposes of identity** under "Form of ID – Proof of Identity". Supervisors should begin the barcode scanning process by scanning in the voter history of those who voted after signing **Challenged Voter Affidavits** (page 143). The clerk should make available to the supervisors the Challenged Voter Affidavits from

election day to enable the supervisors to verify that correct marks have been made on the checklist. After this work has been completed, the supervisors should finish scanning the barcodes of all other voters who received a ballot on election day. The Challenged Voter Affidavits must be returned to the clerk. RSA 654:12; RSA 654:30.

REMOVAL OF NAMES FROM THE CHECKLIST

REMOVAL FROM THE CHECKLIST

The supervisors shall send notices by mail to the last known addresses of the persons whose names are being considered for removal, stating the reason for removal. Such notices shall also state the time and place at which the Board of Supervisors shall meet to consider the removal of that person's name. The date shall be at least 30 days after the supervisors send notice. RSA 654:38; RSA 654:39.

Supervisors of the checklist are obligated to identify the physical address of each voter and ensure that it is in the jurisdiction in which the voter is registered. When supervisors have reason to believe a voter has moved out of the jurisdiction, the following represent justifiable reasons for sending a 30-day letter:

(a) A voter appears to be living in a single family home where others have moved into and registered to vote.
(b) Supervisors have heard that the voter has moved out of town.
(c) Supervisors cannot identify a physical address for the voter.

The person whose name is being considered for removal shall have a chance, either in person or in writing by mail or messenger, to give the reasons why his or her name should be left on the checklist. The supervisors shall not remove a person's name from the checklist until after the completion of such person's written or oral statement, if they elect to make one. The supervisors shall keep records as proof of compliance with the notice requirement. RSA 654:44.

REPORTS OF TRANSFER

If the supervisors receive notice of a transfer from another board of supervisors, they shall remove that name from the checklist at the next session for the correction of the checklist. The notice shall be retained for at least one year as proof of removal of that name. When the voter registers in another New Hampshire town or ward, this information is maintained automatically in Electio*Net*. RSA 654:36. It is helpful for clerks in larger towns and cities which have multiple wards if the clerk of the new residence indicates the voter's previous street address on the voter registration form.

NOTICE OF PERMANENT CHANGE OF ADDRESS FROM THE UNITED STATES POST OFFICE OR DEPARTMENT OF SAFETY

Supervisors shall also either remove a person's name from the checklist or send the person a 30 day notice letter if notice is received from the United States Post Office, the Department of Safety, directly or through Electio*Net* that the person has permanently moved from the town or ward where he or she is registered to vote. RSA 654:36-b provides:

"If the supervisors of the checklist receive a report from the United States Postal Service or the N.H. Department of Safety directly or as communicated

by the Secretary of State through the centralized voter registration database that a voter has permanently changed his or her address to another town, city, or state, they shall strike that name from the checklist at the next session for the correction of the checklist. As an alternative, the supervisors of the checklist may first send a 30-day notice letter and then shall remove the name from the checklist if the voter does not respond to that notice."RSA 654:36-b.

NATIONAL VOTER REGISTRATION ACT

With the implementation of the National Voter Registration Act (motor voter law), town and city clerks are receiving notices of transfer from several states. If a person is a part-time resident of another State, but has signed a voter application in that State and the report of transfer is received, the supervisor must remove that name from the checklist.

If the individual did not intend to have his or her name removed from the New Hampshire checklist, he or she must sign a new voter application upon his or her return to New Hampshire.

VERIFICATION OF CHECKLIST

The supervisors of the checklist shall verify the checklist:

- On petition of 50 registered voters or 5% of the registered voters, whichever is less, subject to approval after a public hearing by the Ballot Law Commission.
- On petition of a majority of the Board of Supervisors filed with the Secretary of State no later than the fifth Friday after a state election, subject to approval after a public hearing by the Ballot Law Commission.
- In 2011 and once every ten years thereafter.

RSA 654:38; RSA 654:39. The procedure for verification of the checklist is further described in RSA 654:38.

REQUEST TO CORRECT THE CHECKLIST

Any person can at any time submit an application for correction of the checklist to the supervisors for their consideration at their next meeting. This, in effect, allows anyone who believes another person's name is illegally on the checklist to report this to the supervisors. The supervisors should investigate and if they determine it is warranted, send a notice of removal letter to the person. This will require the person to affirm his or her qualifications as a voter. RSA 654:36-a; RSA 654:28.

RSA 654:36-a establishes the following procedure for processing a request to correct the checklist:

"I. A supervisor of the checklist, the town or city clerk, or any other person, may submit a request for correction of the checklist to the supervisors of the checklist or to the town or city clerk based upon evidence that a person listed on the checklist is not qualified as a voter in the town or ward. The clerk shall forward requests for correction of the checklist to the supervisors of the checklist. At the next session of the supervisors, they shall examine the requests and determine whether or not it is more likely than not that the person's qualifications are in doubt.
II. If the supervisors of the checklist determine that it is more likely than not that the person's qualifications are in doubt, they shall send a notice to the person and afford the person at least 30 days to provide proof of his or her qualifications. If the person fails to respond to the 30-day notice or responds but fails to provide proof that

establishes that it is more likely than not that the person is qualified to vote in the town or ward, the person's name shall be removed from the checklist." RSA 654:36-a.

This law requires that a request to remove a person from the checklist must be based on evidence. The supervisors of the checklist must evaluate whether, if true, the information provided in the request would make the person listed in the request disqualified as a voter.

The supervisors must determine if the evidence provided constitutes reasonable evidence. For example, a letter stating "please remove the following people from the checklist" and listing one or more names does not constitute evidence that these people are no longer qualified as voters. Similarly a letter stating "please remove John Doe from the checklist because I think he might have moved," does not constitute evidence, it merely states an unsupported suspicion. But, a letter stating, "Please remove John Doe from the checklist, as he used to be my neighbor and he moved to Florida in June." does state evidence.

If a reasonable person reading the request for correction of the checklist would conclude that, if found true, the evidence in the request would prove the person was no longer qualified as a voter, the 30-day notice letter must be sent.

SUPERIOR COURT

Any citizen may bring a complaint before the Superior Court if they believe his or her name or the name of some other citizen is illegally placed on the checklist or is illegally being kept off the checklist. RSA 654:42.

NO PHYSICAL (DOMICILE) ADDRESS INFORMATION ON FILE

Supervisors of the checklist have a legal obligation to ensure that every voter has a residence in the town or city ward in which the voter is registered to vote. Each voter must have a physical (domicile) address.

RSA 659:13, requires that ballot clerks should "state the address listed on the checklist for the voter, and ask if the address is correct" – before providing a ballot to the voter on election day. This is an opportunity to update address information in voter registration files. Supervisors should re-check the checklists for address updates since active voters should have provided ballot clerks with such information on every election day.

NOTICE OF DUPLICATE VOTER

The creation of a statewide voter registration system ensures that voters who have moved will sometimes appear twice in the system. Supervisors of the checklist have a legal obligation to resolve duplicates before an election.

If the supervisors of the checklist receive a notice of duplicate voter from the State or other jurisdiction, they should check their records, looking for information that would help identify whether it is the same voter.

Once they have identified that it is likely to be the same voter, they should refer to the registration date in Electio*Net* and the paper record to attempt to determine in which town the voter is most likely to be registered. It is reasonable to conclude that the most recent registration is the valid registration. Then, the supervisors or their staff

should contact the supervisors or town clerk in the other jurisdiction where the voter is registered and resolve in which jurisdiction the voter should be registered. The supervisor or designee of the jurisdiction that should have the registered voter should log into Electio*Net*, select Duplicate Voter, and use the "merge voter" function to merge both records.

ENTRY OF DUPLICATE VOTERS IN ERROR

Supervisors of the checklist should always check Inquiries/Voter Registration in Electio*Net* before entering new registrants. Over 50% of new registrants are already registered voters in New Hampshire. They have an assigned ID number and voter history that is an important record. If an election official enters a new registrant without checking in Electio*Net* for the name in Inquiries/Registration, the odds are at least 50-50 that they will be creating a duplicate unnecessarily. This costs the town unnecessarily to merge the voter at a later time, eliminates an incentive to remove the voter from the town in New Hampshire where he or she was last registered, reduces the credibility of the election process, and increases the potential for fraud.

Hint: To readily find a New Hampshire registered voter in Electio*Net*, it may be useful to search "Statewide" in Inquiries/Registration by entering a partial first and last name.

X. DUTIES OF TOWN CLERKS

PRE-ELECTION DAY

EMAIL ADDRESS, STREET ADDRESS, POLLING HOURS & LOCATION

Clerks shall establish and maintain an official e-mail address and street address, which shall be in Electio*Net* and publicly available to voters. Clerks shall maintain up-to-date polling place locations for each election, including street addresses and polling hours, and shall keep such information in Electio*Net*. RSA 657:19-c.

ACCEPTING APPLICATIONS FOR REGISTRATION AS A VOTER

Town and city clerks are required, during regular office hours, to accept applications for registration as a voter and, subject to guidelines issued by the supervisors of the checklist, to take evidence of the applicant's qualifications as a voter. RSA 654:8.

The ultimate determination of whether the applicant is placed on the checklist is made by the supervisors of the checklist.

In cities, the city clerk receives evidence of change of domicile from one ward to another from any person already registered to vote and the clerk notifies the registrar of which polling place the voter is to be permitted to vote. RSA 654:8-a.

Clerks must also accept applications for change of party affiliation. The clerk shall require an applicant to give an oath or affirmation affirming his or her affiliation. The clerk must present such applications for change of party affiliation to the supervisors of the checklist who shall cause the party affiliation to be changed on the checklist as soon as permitted by law. RSA 654:34-a. A change in party affiliation must be documented in Electio*Net*.

NOTICE OF FILING PERIOD -STATE PRIMARY ELECTION

Before the opening of the filing period for a state primary election, the Secretary of State will send the "Notice to Voters of the State Primary Election" to all city and town clerks. City clerks are to forward these notices to ward clerks. Within 10 days of his or her receipt of this notice, the town or ward clerk shall fill in the information and post them in two public places within the town or ward. These notices serve as the warrant for the State Primary. RSA 655:11; RSA 655:12.

DECLARATION OF CANDIDACY AND PRIMARY PETITIONS

Prior to the opening of the filing period for a State primary, the Secretary of State will provide each town and city clerk with a supply of Declarations of Candidacy forms and primary petitions. Only party candidates for state representative or delegate to the Republican state convention shall file with the town or city clerk. RSA 655:15.

Declarations of candidacy and primary petitions <u>must</u> be mailed by the town or city clerk to the Secretary of State on the same day they are filed. RSA 655:18.

PRIMARY PETITIONS

It is the duty of the town or city clerk to examine the primary petitions filed by a candidate for State Representative or Delegate to the Republican State Convention. If a petition is found to be in conflict with the law, the clerk shall note the reason it is not acceptable on the petition and return it within 24 hours to the candidate. For each petition that is rejected, the candidate may file a supplementary petition with the clerk no later than the last day of the filing period for declarations of candidacy. RSA 655:26.

POSTING OF SAMPLE BALLOTS - STATE AND PRESIDENTIAL PRIMARY ELECTIONS

The package of primary election ballots will include 10 sample ballots for each political party. The clerks must post 2 sets of sample ballots in public places in the town or ward within 1 day after he or she receives them. The remainder of the sample ballots are to be posted in the polling area on election day. RSA 656:28. Post one of each party's sample ballot at a height of 48" so as to be conveniently read by voters in wheelchairs.

POSTING OF SAMPLE BALLOTS - STATE GENERAL ELECTION

Ten sample ballots are printed and sent to the town or ward clerk to be posted in 2 public places within the community. The remainder of the sample ballots are to be posted outside the guardrail in the room in which the voting is to be held. RSA 656:18; RSA 658:26. Post one sample ballot at a height of 48" so as to be conveniently read by voters in wheelchairs.

PRINTING OF LOCAL ELECTION MATERIALS

The town or city clerk must prepare regular ballots and instructions to voters and provide for absentee ballot envelopes for local elections. The other forms provided by the Secretary of State may be used for local elections. RSA 658:29; RSA 666:1.

RUN NHVRIN "VOTER CHECKLIST REPORT" FOR SUPERVISORS

Clerks should run the "Voter Checklist" report from NHVRIN as follows:

a. Routinely generate the "Voter Checklist" report from NHVRIN and give it to the supervisors of the checklist.

b. Run NHVRIN report with a start date of 30-days prior to the date when the last report was generated.

c. A "Voter Checklist" report should be generated from NHVRIN immediately prior to every scheduled public supervisors' session.

ABSENTEE BALLOT APPLICATIONS

An individual desiring to obtain an absentee ballot must apply to the town or city clerk. RSA 657:4; RSA 657:6.

RSA 657:12, RSA 657:13, and RSA 657:19-b provide that a signed application for an absentee ballot may be transmitted in person, by facsimile or e-mail attachment to a town or city clerk.

RECEIPT OF APPLICATION AND VERIFICATION

Upon the receipt of an application for an absentee ballot, the clerk shall check that the applicant's name is on the checklist.
Clerks are not permitted to ask for identification from voters who request

absentee ballots over the counter. RSA 657:13; RSA 657:15.

If the absentee ballot applicant's name is not on the checklist, the clerk shall provide the applicant with written notice of what he or she needs to do to get registered and the forms necessary to register, enclose an absentee ballot, and mark the affidavit envelope provided for return of the absentee ballot with the words "not registered." RSA 657:16.

MAILING OR DELIVERY OF ABSENTEE BALLOTS

The clerk must mail or personally deliver the absentee ballot, making certain that the appropriate ballot, affidavit, and instructions are enclosed. The clerk may designate an assistant to deliver an absentee ballot provided that the assistant is not a candidate for office or working for a candidate. The clerk shall send absentee ballots in response to verified absentee ballot requests until 5:00 PM on the day before the election. RSA 657:15. Upon request from a UOCAVA voter that the absentee ballot be e-mailed, the clerk shall e-mail the absentee ballot, affidavit, and instructions to the UOCAVA voter and update the voter's record in Electio*Net*. RSA 657:19; RSA 657:26.

Upon receipt of an absentee ballot application from a UOCAVA voter up to 45 days prior to a presidential primary, state primary, or state general election, clerks must enter the absentee ballot request in Electio*Net*. Pursuant to a request from a UOCAVA voter, the clerk will mail or e-mail the voter an absentee ballot, affidavit (oath), and instructions no later than 45 days prior to a presidential primary, state primary, or general election. Following this date, the clerk will continue to respond to UOCAVA requests, without delay, until the 5:00 PM on the day before the election. RSA 657:19.

The town or city clerk shall forward a copy of all FPCAs to the supervisors of the checklist. RSA 657:19-a.

FPCAs are honored as absentee ballot applications applying to all elections held during the full calendar year in which they are received, except that FPCAs received in the calendar year prior to the year of a presidential election shall be honored through the presidential primary. Clerks may use a Federal Write-in Absentee Ballot (FWAB) as a request for an official absentee ballot, particularly when they do not have a signature of the voter on file. RSA 657:10-b; RSA 657:19-a.

LIST OF ABSENTEE VOTERS

The clerk shall maintain an up-to-date list, arranged by voting place, of all (regular and UOCAVA) applicants to whom absentee ballots have been sent, and shall identify on the list those absentee ballot envelopes which have been returned by the voter. RSA 657:15.

A copy of the list of absentee ballot applicants shall be provided to a candidate, at cost, upon receipt of a direct request from the candidate or to a person presenting an original or a copy of a notarized request from a candidate. The list is otherwise a non-public document. Because of the non-public nature of this list, emailing such lists is not permissible. RSA 657:15; RSA 654:31-a.

This list shall exclude voters who have presented to the supervisors of the checklist valid protective orders pursuant to RSA 173-B or who are confidential voters under RSA 7:46. RSA 657:15.

The Secretary of State maintains a public website that enables an absentee voter to enter his or her name, town, and date of birth and determine whether his or her absentee ballot request was received by the clerk, when an absentee ballot was sent, and whether an envelope purporting to contain the ballot was received from the absentee voter, and if rejected, the reason for rejection. To ensure that voters know what happened to their absentee ballot request and their returned absentee ballot, it is important to keep this feedback current, thereby providing transparency for the voter. This will help absentee voters recognize past rejections and correct their mistakes in the future. RSA 657:26.

INSTRUCTIONS TO STATE SITE

The city or town clerk shall provide instructions to absentee voter applicants describing how to access the Secretary of State's "Voter Information Look-up" at: http://sos.nh.gov/VoteInforLook.aspx. This may be accomplished with a link from their website to the Secretary of State's "Voter Information Lookup." RSA 657:26.

RETURN OF MARKED BALLOTS

A voter who has received an official voting ballot must either mail or personally deliver it to the town or city clerk. RSA 657:17.

If personally delivered, the voter, himself or herself, must deliver the ballot to the clerk's office. Clerks are not authorized by law to receive completed absentee ballot return envelopes from anyone other than the voter or the U.S. Mail (including UPS, Fed-Ex, and other commercial delivery services).

The law creates an effective deadline of the day before the election for a voter to personally return an absentee ballot. Clerks or a designee are required to be available between the hours of 3 p.m. and 5 p.m. on any day that is a deadline for an election law filing. RSA 652:20.

Absentee ballots delivered by mail shall be accepted by the town or city clerk no later than 5:00 p.m. on election day. RSA 657:22. If a voter appears in person at the polls to deliver an absentee ballot, the voter should be directed to vote in person using an election day ballot. The voter may keep the absentee ballot/envelope or it may be marked as "voted in person" and added to the challenged absentee ballots that are not opened and which are preserved with other ballots.

RECEIPT OF MARKED BALLOTS

Upon receipt of an outer envelope purporting to contain an official absentee ballot, the clerk shall attach the voter's absentee ballot application form to the return envelope, and record the information in Electio*Net*. All such envelopes shall be preserved unopened until election day. RSA 657:18.

Any absentee ballots received in the mail prior to 5:00 p.m. on election day must be considered valid if properly filled out. RSA 657:22.

No UOCAVA voter's ballot shall be rejected for lack of an attached application provided a signature is available for comparison on a voter registration document. RSA 657:23.

STUDENT VOTERS

Students should be treated like any other person applying for registration or, if already registered, seeking to vote. To become registered the applicant will have to sign, under penalty of voting fraud, the registration form that includes the phrase "and if registering on election day,

that I have not voted and will not vote at any other polling place this election." RSA 654:7. If an election official, another voter qualified to vote in the polling place, or a challenger appointed in writing by the state political party has evidence that a person has already voted in the election, by absentee ballot or otherwise, they may make a voter challenge with the moderator. After the election any evidence that a person voted in one town by absentee ballot and in a second in person should be reported to the Attorney General's Office. It is a felony to vote in the same election in New Hampshire and in some other state.

SUPPLYING BALLOTS, CHECKLISTS, FORMS

The clerk must bring the ballots, absentee ballots, checklist and election forms supplied by the Secretary of State for election day.

RUN NHVRIN "VOTER CHECKLIST REPORT" FOR SUPERVISORS

On the day before every election, clerks should run the "Voter Checklist" report from NHVRIN. Such reports generated for election day should be given to the supervisors on the day of the election prior to the opening of the polls.

INSPECTING BALLOT CONTAINERS

The town or city clerk must open all boxes of ballots received from the secretary of state for a state election in the presence of at least one other voter as soon as possible after those boxes are received. The clerk must verify that the ballots are the proper ones for that town or city and then reseal the boxes using the sealing labels provided in the box. RSA 656:20; RSA 656:22; RSA 656:29.

DEADLINE DAY FOR FILING

Whenever the election laws require a filing with or an action by an official, such filing or action shall be performed before 5 o'clock in the afternoon of the stipulated day. If the official is the school or town clerk, the school district clerk or his or her designee, or the town clerk or his or her designee, shall arrange his or her time so as to be available between the hours of 3 o'clock and 5 o'clock. RSA 652:20.

CITY CLERK – CHIEF ELECTION OFFICER

The city clerk is the chief election officer for the city and has the duty to establish uniform practices and procedures for all elections conducted by the city. The practices and procedures must conform to state and federal law. RSA 652:14-a. Therefore, while the moderators of each ward remain in charge of that ward's polling place, the moderator must follow any uniform practices or procedures established by the city clerk. RSA 659:9-a.

NURSING HOME ABSENTEE REGISTRATION & VOTING

Residents of Nursing Homes and similar facilities, while encouraged to vote in person on election day if they are able to do so, are frequent absentee voters. Over the years several municipalities have reported incidents causing concern for whether nursing home residents were being unduly influenced when marking their absentee ballots. While not required by law, many clerks arrange an absentee registration and voting event at the nursing homes and similar facilities within their municipality. Either in person or through a designee, the clerk has the nursing home recreation/activities director plan, publicize, and organize a voting event for some day close to but prior to the

election. The clerk, a deputy clerk, supervisors, or some trusted non-partisan designee of the clerk goes to the home and assists those residents who will be unable to travel to the polls on election day with registering absentee, if needed, and voting absentee. This process ensures that no one is able to unduly influence the residents as they make their voting choices. The Secretary of State and the Attorney General's staff are available to assist in training designees or otherwise organizing this type of registration/voting event.

PERSONS WHOSE PHYSICAL DISABILITIES PREVENT THEM FROM SIGNING THEIR NAMES

Some accommodation should be made to allow a person with this type of disability to vote. The best practice would be for the clerk to appoint someone neutral to take the absentee ballot to the voter and to verify that the stamped name is legitimate as the voter's signature. The clerk's appointee should countersign both the application and the affidavit envelope next to the stamped signature or submit a written and notarized statement to accompany the sealed affidavit envelope verifying that the voter himself or herself caused the ballot to be marked and the affidavit to be stamped with the voter's signature. New Hampshire Constitution, Part 1, Article 11.

ASSISTANCE TO OBVIOUSLY IMPAIRED PERSONS WHO ARE UNABLE TO COMMUNICATE

Persons with Alzheimer's disease or persons with other disabilities, who are otherwise qualified as voters, should be allowed to vote as long as they are able to vote without assistance. If the voter needs assistance, he or she must be able to communicate his or her choice on how their ballot should be marked. Any means of communication that could be understood by a stranger should be considered acceptable. This might include communication such as blinking their eyelids once for yes and twice for no, or tapping a finger once or twice, as the person assisting them reads off the choices. A family member or friend should not be allowed to mark the ballot based on how the family member or friend believes the voter would have voted had the voter been able to communicate a choice.

A person with a power of attorney is not allowed to vote for such person. Both the voter and the person assisting the voter must take the oath required by law. The voter must be afforded the opportunity to take the oath orally, in writing, or by any other means of communication. If the voter lacks the capacity to take the oath they are not allowed to vote. RSA 659:20.

ELECTION DAY DUTIES – TOWN CLERK

PROCEDURE FOR ACCEPTING VOTERS

When the voter has completed marking the ballot, he or she checks out with the clerk by approaching the checkout table and stating his or her name (name and party, if a primary) to the town or ward clerk. The clerk places a mark beside the voter's name on the checklist. Towns and cities using ballot counting devices are not required to have a checkout table. RSA 659:23.

DELIVERY OF ABSENTEE BALLOTS TO MODERATOR

On election day, prior to the time set for processing absentee ballots the town clerk shall deliver the absentee ballot envelopes received from absentee voters,

with the applications attached, to the moderator. RSA 657:23.

Because the deadline for receipt of absentee ballots is 5:00 p.m. on election day, clerks should arrange to retrieve all U.S. mail delivered on election day by 5:00 p.m. Any absentee ballot return envelopes received by 5:00 p.m. that day must be counted. The clerk shall record absentee ballots received after such time in Electio*Net* with the return date and shall mark the ballot as rejected due to receipt after election day. RSA 657:22.

ABSENTEE BALLOT LIST

On election day, clerks must record the reasons that any absentee ballot has been rejected by the moderator on the clerk's absentee ballot list created under RSA 657:15. RSA 657:26; 42 U.S.C. 1973ff-1; HAVA Section 703.

OUT OF BALLOTS

If the supply of official ballots shall become exhausted the town or city clerk shall prepare additional unofficial ballots as provided in RSA 658:35. Photocopies should be made of an unused official ballot. Each photocopy ballot should be authenticated by the clerk or designee signing his or her name or initials prior to being issued to the voter, to distinguish any such unofficial ballots from fraudulently created ballots. RSA 659:24. Keep an accurate record of the number of unofficial ballots created and the number put into use as election day ballots.

As an alternative to photocopying ballots, the clerk may use leftover absentee ballots. In that event, the clerk should cross out the word "absentee" and initial the absentee ballot prior to being used by the voter.

Generally, at least ten such ballots should be used. If fewer than ten unofficial ballots will be needed, avoid any procedure that would make the ballot(s) used by the last few voters identifiable.

Clerks should monitor the voter turnout and anticipate the need for additional ballots so that he or she can be prepared before the official supply is exhausted. RSA 659:24.

HOW TO GET AN ABSENTEE BALLOT TO SOMEONE WHO IS INCAPACITATED ON THE DAY OF THE ELECTION

Technically, there is no state law which establishes a deadline for applying for an absentee ballot other than the deadline that absentee ballots must be received by 5:00 p.m. on election day. RSA 657:22.

The town or city clerk may deputize someone from his or her office, or take an absentee ballot to the person and then accept receipt of the completed ballot in person. The constitutional right to equal protection may require that if a clerk extends this service to one person but not to a similarly situated person, the clerk must have at least a rational basis for treating the two people differently. Generally, it is recommended that clerks adopt a uniform practice, treating all similarly situated persons equally.

COUNTING THE BALLOTS

The moderator is responsible for supervising the counting of ballots. The town clerk, selectmen, and other election officers should participate in the ballot counting process as directed by the moderator. RSA 659:60.

REPORTING THE RESULTS

After all state election ballots have been counted, the town or ward clerk must report the results on the Return of Votes forms provided by the Secretary of State

by 8 AM on the day following the state election. The ward clerk should send copies to the city clerk. Subject to the request of the Secretary of State, Ballots Cast, Names on Checklist forms and Moderators Worksheets (page 170) should be completed within 48 hours (or sooner if requested) after the closing of the polls. The city or town clerk must keep a copy of the Return of Votes, Ballots Cast Form, Names on Checklist, Moderators Certificate, Moderator's Worksheet, and should retain tally sheets and reconciliation worksheets. RSA 659:73; RSA 659:75.

DELIVERY OF BALLOTS

The election officers designated to deliver the ballots to the clerk should deliver the cast and counted ballots in a sealed container to the town or city clerk. In the presence of these officials, the clerk shall subscribe upon the label the time when the ballots are received and sign his or her name in the appropriate blank on the sealer. RSA 659:98.

SPOILED AND UNUSED BALLOTS

The cancelled and unused ballots shall be preserved in suitable containers with the cast ballots. RSA 659:95.

TALLY SHEETS NOT SEALED IN BALLOT BOX

To permit review of tabulation results after the election, election night tally sheets should not be sealed in the ballot box.

POST ELECTION DUTIES – TOWN CLERK

TIE VOTES

In the case of a tie vote at any town election, the winner shall be determined by lot by the town clerk in the presence of the candidates who are tied, if upon notice from the clerk, they choose to be present. RSA 669:36.

BALLOTS - RIGHT TO KNOW LAW

Ballots are explicitly exempted from the Right-to-Know law, RSA 91-A, by RSA 659:95, II; RSA 660:16, II; and RSA 669:33, II. Ballots must be sealed into containers at the end of counting on election day and must be preserved in those sealed containers until opened by order of the Secretary of State or in local elections by the Board of Recount. Even then the sealed containers must be opened under conditions that preserve the integrity of the ballots and upon completion of the recount, the ballots must be resealed. Upon order of the Ballot Law Commission or a court hearing an appeal from a recount, protested ballots should be made available to the Commission or the Court, but even then under the control of the Secretary of State or the clerk, except when in actual possession of the court.

RIGHT TO KNOW LAW – VOTER REGISTRATION RECORDS

All information is non-public <u>except</u> the voter's name, the Electio*Net* ID number, physical street address, mailing address, town, city, party affiliation, if any, and voter history. RSA 654:31-a

Election officials and law enforcement personnel, in line with their official duties, may access and disclose information from voter forms identified in RSA 654:31-a below if necessary to resolve a challenge to an individual registering to vote or voting.

Right to Know Exemption. "The information contained on the checklist of a town or city, specifically, the name,

street address, mailing address, town or city, and party affiliation, if any, of registered voters, except as otherwise provided by statute, is public information subject to RSA 91-A. All other information on the voter registration form, absentee registration affidavit, qualified voter and domicile affidavits, affidavit of religious exemption, and application for absentee ballot shall be treated as confidential information and the records containing this information shall be exempt from the public disclosure provisions of RSA 91-A, except as provided by statutes other than RSA 91-A. Notwithstanding the foregoing, qualified voter and domicile affidavits are public records subject to RSA 91-A for the sole purpose of challenging an individual registering to vote or voting, challenging ballots to be recounted, to the extent that such ballot challenges are specifically authorized by law, or determining the accuracy of any qualified voter or domicile affidavit. Election officials and law enforcement personnel in furtherance of their official duties may access and may disclose information from the voter registration form, qualified voter and domicile affidavits, affidavits of religious exemption, absentee registration affidavits, and applications for absentee ballots, if necessary to resolve a challenge to an individual registering to vote or voting, or if necessary to investigate or prosecute election law violations or any crime. Law enforcement access and use of such records for the investigation or prosecution of crimes unrelated to election law violations shall be limited to the records of specific individuals who are the subject of the investigation or prosecution." RSA 654:31-a.

ELECTIO*NET* – RIGHT TO KNOW LAW

The federal Help America Vote Act of 2002 required the establishment of a statewide database of registered voters. The database, entitled Electio*Net*, is operational and must be used by all jurisdictions in the federal-state primary and general elections and at municipal elections. All information in the statewide database will be exempt from the Right-to-Know law, except for the public information identified above. Individuals wanting to obtain checklists will still have to pay the fee to the towns and cities and obtain them from the Supervisors or the Supervisor's designee. In limited circumstances, the public information in the statewide database can be purchased from the Secretary of State.

RSA 654:45, VI provides:

"The voter database shall be private and confidential and shall not be subject to RSA 91-A and RSA 654:31. The voter checklist for a town or city shall be available pursuant to RSA 654:31. Any person who discloses information from the voter database in any manner not authorized by this section shall be guilty of a misdemeanor."

PRESERVATION OF BALLOTS

State primary, presidential primary, and general election ballots, because they are also used for federal offices, are required by federal law to be preserved until the contest is settled and all appeals have expired or at least 22 months after the election, whichever is longer. 42 U.S.C. 1974, RSA 33-A:3-a.

If a recount is requested for a state election, the ballots will be collected by the Secretary of State. If a recount is conducted for a local election, the ballots

must be retained until the contest is settled and all appeals have expired, or at least 60 days after the election, whichever is longer. If legal action regarding those ballots is pending, the ballots must be preserved until destruction is authorized by the court. RSA 669:33; RSA 33-A:3-a.

Absentee ballot return envelopes received after election day shall be preserved unopened in the same manner as ballots used at the election and shall be destroyed, unopened and unexamined, when the other ballots used in that election are destroyed. RSA 657:22. These late absentee envelopes must be recorded in Electio*Net*. RSA 657:15; RSA 657:26; HAVA Section 703.

PRESERVATION OF CHECKLIST

After every election, state or local, a marked copy of the checklist must be preserved by the town or city clerk as a public record for a period of at least 7 years. RSA 33-A:3-a.; RSA 659:102.

PRESERVATION OF AFFIDAVITS AND ABSENTEE VOTING MATERIALS

All Challenged Voter Affidavits (including all attached affidavits of religious exemption) shall be retained by the clerk and subject to RSA 33-A:3-a, XXXVIII.

RSA 33-A:3-a,XXXVIII.

"Elections-challenge affidavits by the town clerk: (a) Until the contest is settled and all appeals have expired or 22 months after the election, whichever is longer."

The moderator should save all the rejected (unopened) and any challenged (opened or unopened) absentee ballot envelopes and preserve them in accordance with the laws governing the retention, preservation and destruction of ballots. RSA 33-A:3-a; RSA 659:101. The remaining opened (empty) absentee ballot envelopes shall be preserved with the cast, uncast and cancelled ballots for the applicable retention period.

In the event of a recount, the opened (empty) absentee ballot envelopes should be sent to the Secretary of State along with the ballots.

TOWN ELECTIONS - TOWN CLERK DUTIES

FILING FOR OFFICE

If the town uses non-partisan official ballots, candidates who desire a certain office must file a declaration of candidacy with the town clerk during the 10-day filing period. RSA 669:10 through RSA 669:21.

WITHDRAWAL OF CANDIDACY PROHIBITED

After a filing period for a non-partisan town election, or after a caucus has certified a nominee for a partisan election, the town clerk may not accept withdrawals of candidacy unless the candidate dies or makes oath that he does not qualify because of age, domicile or incapacitating physical disability acquired subsequent to his or her filing. RSA 669:22.

ABSENTEE VOTING

Towns using official ballots must provide for absentee voting whenever official ballots are used. Absentee ballots must be printed on the same color paper as regular ballots and similarly endorsed. The words "Absentee Ballot" shall be printed on them. Absentee ballots and other absentee voting materials must be prepared and sent out by the town clerk. RSA 669:26 through RSA 669:29.

Signed requests for an absentee ballot may be sent by facsimile or e-mail attachment to the clerk. RSA 657:12; RSA 657:13.

Upon request for an e-mailed absentee ballot from a UOCAVA voter, the clerk shall send the absentee ballot, affidavit, and instructions via e-mail. RSA 657:19; RSA 669:25.

SAMPLE BALLOTS

The town or city clerk shall print at least ten sample ballots for each town or ward. RSA 656:18; RSA 656:28.

PRINTING OFFICIAL BALLOTS

The order of offices is left to the discretion of the town clerk for local elections. Most town clerks print the offices which a town is required to elect first on the ballot - moderator, selectmen, town clerk, board of supervisors of the checklist. Optional offices such as auditor, sewer commissioners, constable, etc. are usually printed further down the ballot. Following the names printed on the ballot under the title of each office, there shall be as many blank lines as there are persons to be elected to that office. Names must be printed pursuant to RSA 656:5-a. See candidate rotation chart on page 48.

A candidate should specify the form of his or her name to be placed on the ballot. For State offices, a candidate must use his or her legal name in any combination provided the name designated is not deceptive. RSA 655:14-b. Nicknames are permitted in limited circumstances.

Questions to voters to be printed on an official ballot may be printed beneath the offices to be filled or on a separate ballot at the discretion of the town clerk. Questions should be followed by the words "yes" and "no" with boxes for the voter to indicate his or her preference. RSA 669:23.

REQUEST FOR RECOUNT IN TOWN ELECTIONS

A candidate for town office may request a recount of the ballots cast. The application must be in writing and submitted to the town clerk with the appropriate fee. The last day to apply for a recount is 5 PM on Friday following the election. The deadline for requesting a recount of a question that appeared on the official ballot of the Town, on a question that affects only the Town, is 7 days after the meeting or special meeting. RSA 669:30; RSA 669:31; RSA 669:32; RSA 669:33; RSA 669:34; RSA 669:35; RSA 40:4-c; RSA 40:4-d.

RECOUNT FEES

The Legislature in 2003 changed the fees that must be paid and the circumstances under which fees must be paid for a recount. The charge goes up based on the percentage difference in votes received, as determined at the election night count, by the winner and the person requesting the recount.

If the person requesting the recount, however, wins the recount, the fee must be refunded or if the recount results in a difference of less than one percent any charge made beyond the statutory fee must be refunded.

RSA 669:31:

"I. The clerk shall notify each of the candidates for the office for which there is to be a recount at least 3 days prior to the day appointed for the recount of ballots. No other notice shall be required.

II. The applicant shall pay to the town clerk, for the use of the town, the following fee:

(a) If the difference between the vote cast for the applying candidate and a candidate declared elected is less than one percent of the total votes cast, the fee shall be $10.

(b) If the difference between the vote cast for the applying candidate and a candidate declared elected is between one percent and 2 percent of the total votes cast, the fee shall be $20.

(c) If the difference between the vote cast for the applying candidate and a candidate declared elected is between 2 percent and 3 percent of the total votes cast, the fee shall be $40.

(d) If the difference between the vote cast for the applying candidate and a candidate declared elected is greater than 3 percent of the total votes cast, the candidate shall pay the fee as provided in RSA 669:31, II(c) and shall agree in writing with the town clerk to pay any additional costs of the recount.

III. If any person who has applied for a recount is declared elected by reason of the recount, the town clerk shall return to the person within 10 days of the recount all fees paid at the time of applying.

IV. If any person who has applied for a recount loses the recount by a margin of less than one percent of the total votes cast, the town clerk shall return to the person within 10 days of the recount any fees that were paid in excess of those required by subparagraph II(a)."

SCHEDULED TIME FOR THE RECOUNT

The clerk then appoints a time for the recount which is not earlier than 5 days, nor later than 10 days after receipt of the application. This period allows all recounts requested for an election to be held at one time if the clerk so wishes. The clerk must notify each candidate of the scheduled date of the recount at least 3 days prior to the recount. RSA 669:30, RSA 669:31. It is recommended that the clerk consult with the other members of the Board of Recount (Moderator and Selectman for towns; School District Moderator and School Board for School Districts) when scheduling the recount.

BOARD OF RECOUNT

The recount is conducted by a board of recount composed of the town clerk, moderator and selectmen. An election officer whose election is being recounted must disqualify himself or herself from the recount. The moderator would then appoint a replacement.

Candidates or their representatives ought to be given an opportunity to view, but not handle, the ballots at the recount and to record any protests he or she may have to how a particular ballot is counted. RSA 669:32.

RECOUNT ON QUESTION

Any 10 voters may request a recount of a question voted on by the town by the Australian or nonpartisan ballot, by applying to the town clerk before the expiration of 7 days from the date of the election. The fee is $10. The clerk shall set the time for the recount not earlier than 5 days nor later than 10 days after the receipt of the application. RSA 40:4-c.

RESEALING OF BALLOTS

Following the recount, the ballots are resealed and preserved by the town clerk until the contest is settled and all appeals have expired or at least 60 days, whichever is longer. RSA 669:33; RSA 33-A:3-a.

RECORD – OATH OF OFFICE

The town clerk shall make a record of every oath of a town officer taken in

open town meeting at the time of the election, and of every such oath taken before him or her at any other time and place. The town clerk shall record and keep on file every certificate of an officer being sworn in before a selectman or justice of the peace. RSA 42:8. See oath of office at page 53 and page 138.

ASSUMING THE OFFICE

No person shall assume a town office until after the time period for requesting a recount is over. If a recount is requested for a town office, no person shall assume that office until the recount is completed. RSA 669:10; RSA 669:34. Once a recount is completed, the outcome determines when the candidate assumes office.

If the candidate who was declared the winner at the original count on election day is also declared the winner at the recount, the law makes no provision for delaying the declaration or certification of the results or the assuming of office. The candidate may take the oath of office, and assume office at any time following declaration of the results of the recount, provided the oath is taken by the deadline established in RSA 42:6; RSA 669:34.

If a candidate other than the candidate originally declared the winner by the moderator on election day is found to be the winner after the recount, and no appeal to the superior court is taken from the recount, the candidate may assume office on the sixth day following the date of the completion of the recount, provided the oath is taken prior to the deadline established in RSA 42:6. If an appeal is taken, the person may not assume office until the superior court has issued a final ruling on the appeal. RSA 669:34.

Because the term of office continues until the election and qualification of the office holder's successor, the person holding the office prior to the election would continue to hold the office until either the certification on the sixth day or if the recount is appealed, until the Superior Court issues an order, and the person declared elected takes the oath of office. RSA 41:3; RSA 669:10,I; RSA 669:34.

XI. DUTIES OF SELECTMEN

RESPONSIBILITIES

Selectmen are responsible for budgeting for elections, planning for emergencies, establishing polling hours, setting up the polls before the opening of the polls, participating in ballot counting under the supervision of the moderator, and signing the ballot box seal after counting is completed at the end of the day. (See seal on page 152.)

PRE-ELECTION DAY - APPOINTING INSPECTORS OF ELECTION

If the two major political parties fail to make appointments before July 15, the selectmen shall appoint 2 inspectors of election from the two political parties. If the number of voters qualified to vote at a polling place exceeds 2000, one additional inspector from each political party may be made for each 1500 qualified voters. An inspector of election shall be registered to vote at the polling place where he or she serves and shall be affiliated with one of the two major political parties. Each inspector shall be sworn to the faithful performance of his or her duties and shall hold office for 2 years from November 1 in the year in which he or she is appointed or until a successor is appointed and qualified. RSA 658:2; RSA 658:4.

ALTERNATES

In making appointments of inspectors of elections, the selectmen may designate a list of alternates, who shall meet the same qualifications as inspectors of elections, to be called in numerical order to serve in case one or more of the principal appointees fails to accept the appointment or is otherwise unavailable to perform his or her duties. RSA 658:5.

ABSENCE OF AN INSPECTOR OF ELECTION

If an inspector of election is absent from any election, the selectmen shall appoint replacement inspectors using the list of alternate inspectors. RSA 658:22.

WARRANT ARTICLES

Upon petition of 25 or more voters or 2 percent of the registered voters, whichever is less, but in no event less than 10 voters, presented to at least one selectman no later than the fifth Tuesday before town meeting, the selectmen shall insert onto the warrant for that meeting the petitioned article. RSA 39:3.

POLLING PLACE

Selectmen are responsible for selecting a proper site for the polling place, ensuring it is accessible, providing a proper number of voting booths, establishing a rail and providing the necessary supplies. RSA 658:9. The polling place must be:

- Warmed;
- Lighted – It is strongly recommended that where room lighting does not provide sufficient illumination inside the voting booth for comfortable reading, that supplemental lighting be provided. Towns and cities are encouraged to equip voting booths with inexpensive lamps equipped with a magnifying lens. New Hampshire law requires that booths be "well lighted;"
- Furnished with proper supplies (see list starting at page 146);
- Easily accessible to the elderly and to persons with disabilities;
- Equipped with a United States flag inside the building and weather permitting flown outside the building during election day;
- Equipped with a guardrail constructed and placed so that only

persons inside the rail can approach within 6 feet of the ballot box and any voting booth (This requirement for a rail can be satisfied with a rope or ribbon, but it is important to the proper layout of a polling place.);

- Organized with the guardrail positioned so that the voting booths can be reached only by passing within the guardrail. The guardrail should be positioned in relation to the check-in and check-out tables such that once a voter has checked in and received a ballot it will be awkward to leave the railed in area with a ballot. Ballots should be marked only within the voting booth. (The Attorney General's Office reports a common complaint, particularly in Senate Bill 2 Towns, is that ballots are marked in public or carried outside the rail by voters when the voting booths are all in use. Proper positioning of the rail can be used by the selectmen and the moderator to discourage these improper voting practices.);
- Arranged so that the voting booths are in plain view of the election officers;
- Arranged so that the ballot box is in plain view of the election officers and to the public area outside the guardrail;
- Equipped with no less than one voting booth for every 100 voters qualified to vote at the polling place at a presidential election, one for every 125 voters at state general elections, and one for every 150 voters at other elections. Table top voting screens may be used to accommodate up to 50% of the total requirements for voting booths. RSA 658:9, V. Jurisdictions that have adopted Senate Bill 2 should analyze the length of their warrant/ballot for warrant articles and voting trends and consider adding additional voting booths to avoid excessive delays to voters seeking to cast their ballots. (The Attorney General's Office reports that a common complaint, especially in Senate Bill 2 towns, is an excessive delay resulting from an insufficient number of voting booths to accommodate the turnout of voters and the extended time required to mark ballots with a large number of questions. RSA 658:9 provides that "the number of booths erected at the polling place shall be the number estimated by the selectmen to be necessary for the efficient conduct of the election plus any additional number requested by the moderator." Therefore, the Selectmen should consult the moderator when determining the number of booths that will be provided);
- RSA 658:9, V also provides specifically that each polling place shall have no less than two standard voting booths, one specialized voting booth easily accessible to the elderly and to persons with disabilities, and two table-top voting screens.
- Portable booths set up in pods of up to 4 voting stations may be used in lieu of booths described in RSA 658:9, II and screens described in RSA 658:9, IV. Each voting station in the pod shall have 2 sides enclosed that are at least 32 inches long and meet at a right angle. A table top shall fit into the corner of the enclosed sides with the edges of the table top that contact the sides being at least 14 inches deep and the edge of the table facing the voter no less than 25 inches in width. The third open side of the voting station shall be enclosed by a curtain large enough, and designed in a way to give the voter privacy. RSA 658:9, VI

- Equipped with at least one voting booth specially designed in conformance with RSA 658:9, III, to be easily accessible to persons with disabilities and the elderly. The Secretary of State has provided every polling place in the state with a large voting booth that satisfies this requirement. This booth must be used at all elections. Each polling place must also have at least two table-top voting screens for use at an election. The formula for determining the number of specialized voting booths and table top screens necessary for an election is set forth in RSA 658:9, V.
- The Selectmen should be prepared, or have town employees prepared, to deal with any facility-related problems, including emergencies such as fires and power outages, and also including minor problems such as burn-outs of light bulbs illuminating the polling booths, that might develop during voting.

BALLOT COUNTING DEVICES

Selectmen (or the governing body of a city) may elect to use electronic ballot counting devices. If a decision is made to do so, the town or city must notify the Secretary of State. RSA 656:40.

Only manufacturers and models of ballot counting devices approved by the Ballot Law Commission may be used. RSA 656:41.

Each ballot counting device must be tested prior to each election. RSA 656:42, II. See page 148 for security measures and testing procedures. Any person who knowingly violates the testing procedures established for ballot counting devices shall be guilty of a misdemeanor if a natural person, or a felony if a corporation. RSA 656:42, VI.

The statute making it a felony crime to tamper with a vote casting or ballot counting device also makes it a felony to tamper with software used in the casting or counting of ballots or to design such software so as to cause incorrect tabulation of the ballots. RSA 659:42.

POSTING OF WARRANT

Selectmen are responsible for posting the warrant at least 14 days before the election. The warrant states the date of the election or town meeting, the location of the polling place, offices to be elected, the questions that will be on the ballot and the polling hours. RSA 658:1; RSA 669:2.

ADDITIONAL SITES. Selectmen are responsible for equipping any additional polling place.

SPECIAL ELECTIONS

If a vacancy exists in the office of State Representative, the Selectmen must determine whether a special election will be requested from the governor and executive council. If the representative district encompasses two or more towns, the selectmen from the towns should consult and seek to reach consensus regarding whether a special election shall be requested. If there is a regularly scheduled election between 80 to 180 days from the date from the date when the governor and council declare that there shall be a special election and all of the municipal officials agree and request that the election be held with the regularly scheduled election, then the Governor and Council shall set the special election to occur with that regularly scheduled election. Otherwise, the special election shall be held no less than 110 days nor more than 124 days following the declaration by governor and council. RSA 655:81, I.

ACCESSIBILITY OF THE POLLING PLACE AND THE VOTING PROCESS

The New Hampshire Constitution, Part 1, Article 11, provides in pertinent part:

> *"Voting registration and polling places shall be easily accessible to all persons including disabled and elderly persons who are otherwise qualified to vote in the choice of any officer or officer to be elected or upon any question submitted at such election."*

The New Hampshire Constitution, State, and federal statutes further establish that for every election the polling place and the voting process must be easily accessible. In order for a polling place to be considered easily accessible, the following conditions must be met:

1) Where parking is provided for the polling place, there shall be at least one van-accessible parking place designated with the international symbol of accessibility. The dimensions and requirements of the parking space are outlined in RSA 658:9-a, I. The provisions of this paragraph may be adopted by each municipality on an optional basis.
2) The paths to and from the polling place shall comply with accessible route requirements set forth in RSA 658:9-a.
3) If there is a curb in a path of travel to the accessible entrance, there shall be a curb ramp that complies with the NH building code, RSA 155-A, and the ADA.
4) Where a ramp is provided it shall comply with the NH building code, RSA 155-A, and the ADA.
5) Entrances, doors, and doorways must comply with the NH building code, RSA 155-A, and the ADA. There must be at least one primary entrance to the polling place that is accessible to elderly persons and persons with disabilities that is clearly marked with the international symbol of accessibility. If there are entrances that are not accessible, they must have signs posted directing voters to the accessible entrance.
6) The path of travel inside the polling place must comply with the accessible route requirements of the NH building code, RSA 155-A, and the ADA.

See RSA 658:9-a.

The Help America Vote Act of 2002 places great emphasis on ensuring the accessibility of the voting process. HAVA funds the purchase of devices that assist persons with disabilities and the elderly to vote privately and independently. The Secretary of State can provide more information and has staff available to consult with local election officials. See further discussion of accessibility starting at page 115.

Information on polling place accessibility is also available from the United States Department of Justice at: http://www.usdoj.gov/crt/ada/votingck.htm

ELECTION DAY DUTIES - SELECTMEN

POLLING HOURS

The selectmen or the governing body of a town or the governing body of a city sets the polling hours.

At all state elections in towns and cities the polls shall open not later than 11:00 AM and shall close not earlier than 7:00 PM. In cities, the city council shall determine the polling hours no later than 30 days prior to a state election.

An exception to the 11:00 AM to 7:00 PM time frame is found in those communities which voted to open the polls at 8:00 AM. The polling hours in those communities would be 8:00 AM to 7:00 PM. Once these hours have been set by a vote of town meeting, however, they may be altered only by a vote of town meeting. RSA 659:4-a

As an alternative to the procedures established in RSA 659:4-a, I-III and described above, the governing body of a town may extend the hours of polling in the town. Any extension of hours adopted by a town may not take effect sooner than 60 days after its adoption.

Municipalities are encouraged to establish a uniform polling place and polling hours for all elections. It helps a voter to know when and where to vote if the polling location and times are kept constant.

The Attorney General's Office reports that the failure to open the polls at the advertised time is a common problem. In some cases voters assert that the effect of failing to open on time is to deny them the opportunity to vote as work or travel commitments preclude their waiting extended periods of time or returning later in the day. Every effort should be made to ensure the polls open at the pre-determined and advertised time. RSA 659:3; RSA 659:4; RSA 659:4-a; RSA 659:6; RSA 659:8; RSA 669:25; RSA 669:45.

ATTENDANCE

For state primaries and general elections, the New Hampshire Constitution requires the attendance of the selectmen. N. H. Constitution, Part 2, Article 32.

ELECTION OFFICIALS

Selectmen are election officers. The moderator may suggest work stations within the polling place for selectmen. RSA 658:23; RSA 658:24; RSA 659:9.

Appropriate duties include greeting and directing voters to the correct intake lines, staffing the "No Photo ID" table to assure proper voter throughput, and checking the voting booths regularly to ensure that a writing instrument and the instructions to voters signs are present and that any electioneering materials or trash left by voters is removed. Selectmen are authorized to accept the oaths for those who must complete Challenged Voter Affidavits, Qualified Voter Affidavits, Domicile Affidavits, or Page 2 of the Voter Registration Form. Selectmen may be assigned to assist the supervisors should a logjam of voters needing to give oaths occur.

COUNTING OF BALLOTS

Selectmen shall participate in the counting process as directed by the moderator, unless a selectman is a candidate for a non-election official office. RSA 659:60; RSA 658:24; NH Constitution, Part 2, Article 32.

SECURING THE BALLOTS

Selectmen or their designee(s) shall sign the label for resealing the ballots on the container indicating the number of cast, canceled, and unused ballots in the container. If selectmen have questions about such figures, they should ask the moderator or clerk before signing the label. RSA 659:95; RSA 659:97. Selectmen should ensure that election night tally sheets are not sealed in the ballot box.

DELIVERY OF BALLOTS

The selectmen or their designees and the moderator or his or her designee shall deliver the sealed containers to the town or city clerk who shall in their presence enter in the time of day and shall sign his or her name on the sealer. RSA 659:98.

XII. ACCESSIBILITY

The New Hampshire State Constitution and state and federal laws require every polling place to be easily accessible to all persons, including persons with disabilities and elderly persons who are otherwise qualified to vote. In order for a polling place to be deemed accessible, a number of specific conditions must be met. These conditions address the parking; the path of travel (to, from and within the polling place); the ramps (where provided); the entrance(s); the doors; the floor surfaces; and the voting booth(s). New Hampshire Constitution, Part 1, Article 11; RSA 658:9-a.

In 2007, the Legislature amended RSA 658:9-a, which sets forth the conditions for accessibility at polling places, to make clear that the statutory accessibility conditions must comply with the New Hampshire building code, RSA 155-A, and the Americans with Disabilities Act of 1990, 28 C.F.R., part 36.

Our best advice on what constitutes an accessible polling place is discussed below by category.

RSA 658:9-a Accessibility- *Every polling place in which state elections are held shall be easily accessible to all persons, including persons with disabilities and elderly persons who are otherwise qualified to vote in the choice of any officer or officers to be elected or upon any question submitted at such election. In order for a polling place to be considered accessible to elderly persons and to persons with physical disabilities, the following conditions shall be met; provided, however, that the provisions of paragraph I may be adopted by each municipality on an optional basis:*

PARKING

RSA 658:9-a, I. states – *Where parking is provided for the polling place, there shall be at least one van-accessible parking space that is in compliance with the New Hampshire building code, RSA 155-A, and with standards implementing the Americans with Disabilities Act of 1990, 28 C.F.R. part 36 and designated with the international symbol of accessibility. The van-accessible parking space shall be at least 8 feet wide with an adjacent and parallel access aisle that is at least 8 feet wide and located on a level surface as close as possible to the accessible entrance. There shall be a clear path of travel without curbs or steps to the accessible entrance of the polling place from the van-accessible parking.* (Emphasis added)

NOTE: The requirements for accessible parking apply only to those polling places that have parking lots.

An accessible parking space must be at least 8 feet (96 inches) wide, 20 feet long and have a parallel and adjoining access aisle that is 20 feet long. The access aisle should be marked by diagonal stripes and have a "No Parking" sign so that all vehicles are prohibited from parking in the access aisle. The stripes are preferably, but not necessarily, yellow in color.

- Accessible parking spaces must be located on level surfaces.
- There must be at least 1 accessible parking space in parking lots of 1 to 25 total parking spaces; 2 accessible parking spaces in parking lots of 26 to 50 total parking spaces; 3 accessible parking spaces in parking lots of 51 to 75 total parking spaces; 4 accessible parking spaces in parking lots of 76 to 100 total

parking spaces; 5 accessible parking spaces in parking lots of 101 to 150 total parking spaces; 6 accessible parking spaces in parking lots of 151 to 200 total parking spaces; 7 accessible parking spaces in parking lots of 201 to 300 total parking spaces.

- At least 1 designated accessible parking space must be Van Accessible, that is, the parking space and an adjoining access aisle must each be 8 feet (96 inches) wide and be located as close to the main entrance as possible. **See figure 1**.
- Additional accessible parking spaces must be 96 inches wide but the adjoining access aisles need only be 60 inches wide and 20 feet in length. Adjoining access aisles may be shared by accessible parking spaces. **See figure 2.**
- All accessible parking spaces must be marked with an upright sign displaying the international symbol of accessibility that is mounted on a post or wall directly in front of the accessible space(s) at a minimum height of 60 inches (measured vertically from the parking surface to the bottom of the sign). Signs should be mounted so that they can be viewed from the driver's seat of a vehicle and in such a way that they cannot be obscured by a vehicle parked in the accessible space. **See figure 3.**

NOTE: Marked pavement may be helpful but **it is not required** and **does not satisfy** the requirement that accessible parking spaces be clearly marked.

ROUTE

RSA 658:9-a, II. states - *The paths of travel to and from the polling place shall comply with the accessible route requirements of the New Hampshire building code, RSA 155-A, and with standards implementing the Americans with Disabilities Act of 1990, 28 C.F.R. part 36.*

- There must be a completely clear path of travel from the accessible parking to the entrance of the polling place.
- The accessible route to and from the polling place must be at least 36 inches wide.
- The slope of the walks to and from the polling place shall be less than 5 percent or 1:20.
- If the accessible route to and from the polling place has a cross slope (side to side tilt) it cannot exceed a 2 percent grade or 1:50.
- The route, or path of travel, must have a continuous common surface that is not interrupted by curbing, bricks, steps and other such features, or by damaged or eroded pavement. Note: There is an exception to this requirement when a change in surface is used to indicate a curb ramp surface.
- The continuous common surface cannot have a change in level that exceeds ¼ inch. A change in level of between ¼ and ½ inch must be beveled with a slope no greater than 1:12. If there is a change in level of ½ inch or more, then a curb ramp must be provided. See figures 4&5. Note: This addresses bumps or raised pavement, not slope.
- The accessible route surface must be stable, firm and slip resistant. (crushed stone, soft sand or mud is unacceptable).

- The accessible route must be kept clear of snow and ice.

CURBS

RSA 658:9-a, III. states - *If there is a curb in a path of travel to the accessible entrance to the polling place, there shall be a curb ramp that complies with the New Hampshire building code, RSA 155-A, and with standards implementing the Americans with Disabilities Act of 1990, 28 C.F.R. part 36.*

- Curb ramps must be provided whenever an accessible route crosses a curb.
- Curb ramps must be at least 36 inches wide, exclusive of flared sides.
- The maximum slope of a curb ramp shall be 1:12.
- The maximum slope of the side flares shall be 1:10. **See figure 6.**
- There must be a detectable warning, i.e., a change in the texture of the surface, extending the full width and depth of the ramp so that a blind or visually impaired person may know by touch that they are entering a ramp.
- There can be no protruding objects such as trees, shrubs, awnings, signs, benches, or buckets that interfere with the 36 inch minimum clear width of an accessible route.
- Objects like phones and fire extinguishers may not protrude more than 4 inches from a wall into the accessible route. Objects that do protrude more than 4 inches into the accessible route must be mounted no higher than 27 inches from the surface so that they are detectable by a person using a cane. Objects hanging or mounted overhead must be higher than 80 inches to provide clear head room.

Note: If an object such as a fire extinguisher or trophy case protrudes more than 4 inches into the route of travel and is mounted higher than 27 inches, place an object (potted plant, waste paper basket) beneath it so that it can be detected by a person using a cane.

RAMPS

RSA 658:9-a, IV. states - *Where a ramp is provided, the ramp shall comply with the New Hampshire building code, RSA 155-A, and with standards implementing the Americans with Disabilities Act of 1990, 28 C.F.R. part 36.*

- Any part of an accessible route that has a slope greater than 1:20 is considered to be a ramp.
- The least possible slope must be used for any ramp. The maximum slope is 1:12, i.e., 1 inch of rise for every 12 inches of run.
- A ramp cannot exceed 30 feet in length (run) and 30 inches in rise. If a ramp must be longer than 30 feet in length or changes direction, then there must be a 60 inch long level platform between the inclined sections of the ramp.
- The clear width of a ramp shall be a minimum of 36 inches.
- There must be level landings that measure a minimum of 60 inches by 60 inches at the top and bottom of every ramp and at every change in direction in the ramp run (sloped portion).
- The cross slope (tilt) of a ramp cannot exceed 1:50.
- Ramp surfaces must be stable, firm and slip-resistant.

- Ramps and landings with drop-offs must have curbs, walls, railings or projecting surfaces that prevent a person from slipping off the ramp. Curbs must be a minimum of 2 inches high.
- Ramps are required to have handrails on both sides that must:
  1. Be mounted between 34 and 38 inches above the ramp or ground surface measured from the top of the rail.
  2. Have a clear space of 1½ inches between the rail and any wall.
  3. Have gripping surfaces that are continuous and that do not rotate within their fittings.
  4. Extend a minimum of 12 inches beyond the top and bottom ends of the ramp and be parallel with the ramp or ground surface.
  5. Be rounded at the ends or returned smoothly to the floor, wall or post. **See figure 7.**

ENTRANCES

RSA 658:9-a, V. states - *Entrances, doors, and doorways shall comply with the New Hampshire building code, RSA 155-A, with standards implementing the Americans with Disabilities Act of 1990, 28 C.F.R. part 36, and with the following requirements:*

(a) There shall be at least one primary entrance to the polling place accessible to elderly persons and persons with disabilities and clearly marked with the international symbol of accessibility.

(b) If there are entrances that are not accessible, they shall have signs posted directing voters to the accessible entrance.

- There must be at least 1 primary accessible entrance to the polling place which is clearly marked with the international symbol of accessibility. Note: It is strongly recommended that the main entrance also be the accessible entrance.
- Doorways must have a minimum clear opening of 32 inches with the door open 90 degrees measured from the face of the door to the opposite stop. **See figure 8.**
- Two hinged or pivoted doors in a series must have between them a minimum space of 48 inches plus the width of any door swinging into the space between them. **See figure 9.**
- Doors in series must either both swing in the same direction or both swing away from the space between the doors. **See figure 9.**
- A door that requires a pull motion to open must have enough space (18 inches minimum) on the pull side of the door to allow for the safe maneuvering of a wheelchair. **See figure 10.**
- The pressure required to open an inside door must be 5 pounds or less. Note: There is no *ADA* standard for an outside door.
- Door hardware must be operable with a closed fist. **See figure 11.**
- Door hardware must be located between 34 to 48 inches above the ground.
- The floor inside and outside of each doorway of a polling place must be level for a distance of 48 inches plus the width of **any door** swinging in to the space.
- Automatic or power doors must operate in a manner and direction that is not hazardous. **Note: automatic or**

power assisted doors are not required.

- The thresholds to the polling place must have changes in level of ¼ inch or less, or ½ inch or less if beveled.
- Floors in polling places must be level with no thick mats or carpets that could trip a person or block a wheelchair. Note: the ADA establishes the maximum thickness of an accessible mat or carpet at ½ inch.

INTERIOR ROUTE

RSA 658:9-a, V. states - *The path of travel in the interior of the polling place shall comply with the accessible route requirements of the New Hampshire building code, RSA 155-A, and with standards implementing the Americans with Disabilities Act of 1990, 28 C.F.R. part 36.*

- There must be a completely clear path of travel from the accessible entrance of the polling place to the registration tables, check-in tables, voting booths, ballot box, and the polling place exit.
- The accessible route within the polling place must be at least 36 inches wide.
- The accessible path of travel must have a smooth and continuous common surface that is firm, stable and slip-resistant.
- Thresholds or other changes in elevation between ¼ and ½ inch must be beveled with a slope no greater than 1:12. If there is a change in level of ½ inch or more, then a ramp must be provided. **See figures 4&5.**
- Carpets or mats are to be no thicker than ½ inch and secured.
- Objects that protrude more than 4 inches into the path of travel must be lower than 27 inches or higher than 80 inches above the floor.

VOTING BOOTHS

RSA 658:9, III states - *In addition to the voting booths described in paragraph II, each polling place shall have at least one voting booth which is easily accessible to elderly persons and to persons with physical disabilities. Each booth shall have 3 sides enclosed, one side in front to open and shut by a door swinging outward or to be enclosed with a curtain. The entrance to the booth shall have a clear opening of at least 60 inches and shall have clearances that comply with the New Hampshire building code, RSA 155-A, and with standards implementing the Americans with Disabilities Act of 1990, 28 C.F.R. part 36. Each side of the booths shall be not less than 6 feet high. The booth shall be at least 60 inches wide at its front, at least 60 inches deep, and at least 60 inches wide along the back wall. The door or curtain shall extend to within 2 feet of the floor and shall be closed while the voter is marking his or her ballot. Each booth shall be well lighted and shall contain a shelf or table at a height of between 30 and 32 inches which shall be convenient for writing with at least 28 inches of unobstructed space from the floor to the bottom of the shelf. The secretary of state shall include a diagram of an accessible booth that satisfies the requirements of this section in the election laws and procedures manual issued pursuant to RSA 652:22.*

- There must be at least 1 accessible voting booth.

- Every accessible voting booth must have 3 sides enclosed and be well-lighted.

- Every accessible voting booth must have a front enclosed by a curtain or a door that swings outward. The door or curtain must extend to within 2 feet of the floor.

- The minimum dimensions are:
  1. Not less than 80 inches high;

2. Not less than 60 inches wide at its front and back; and,
3. Not less than 60 inches deep.

- Every accessible voting booth must contain a shelf or a table that is the width of the booth, is 30 to 32 inches high at the writing surface, and has at least 28 inches of unobstructed space from the floor to the shelf bottom for leg clearance. **See figure 12.**

The federal Department of Justice has published a very helpful guide to federal polling place accessibility requirements. The guide is available on the world wide web at: http://www.usdoj.gov/crt/ada/votingck.htm.

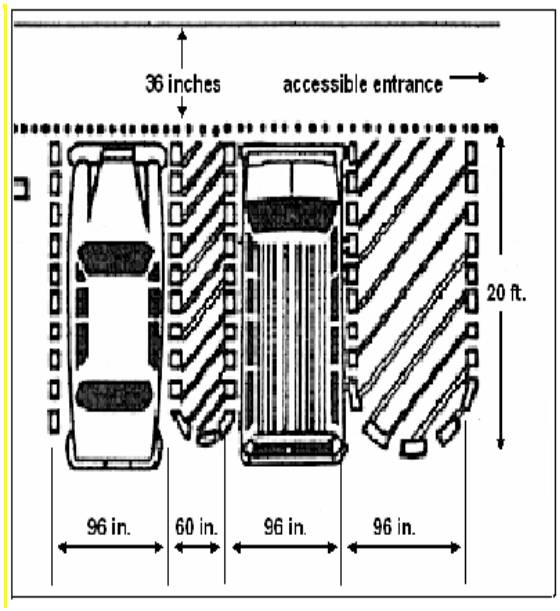

Figure 1

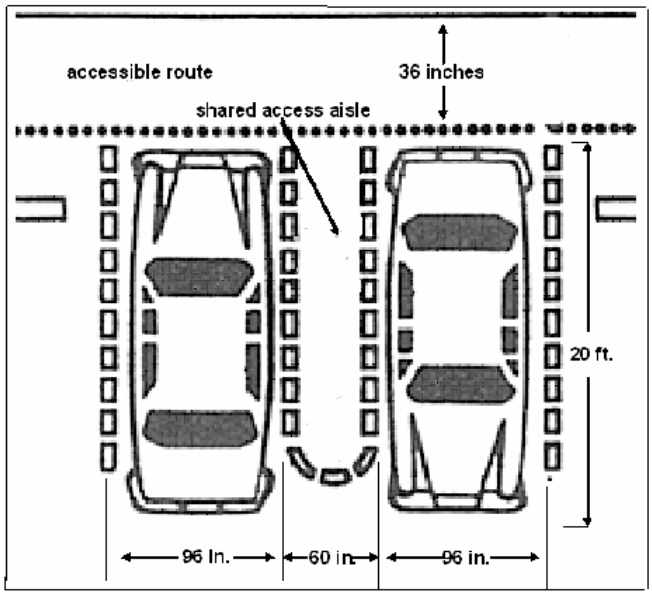

Figure 2

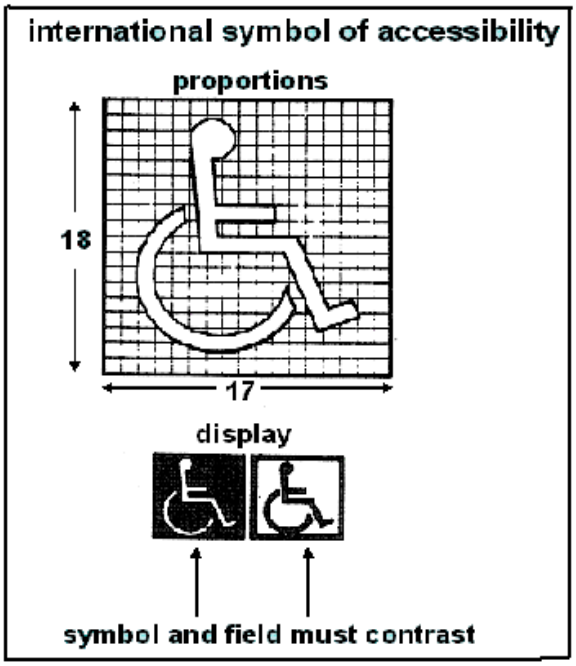

Figure 3

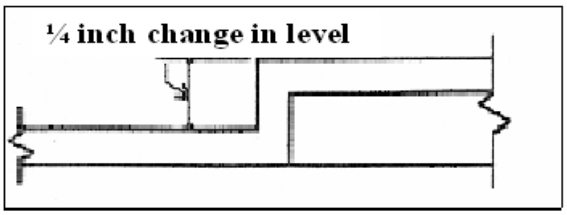

Figure 4

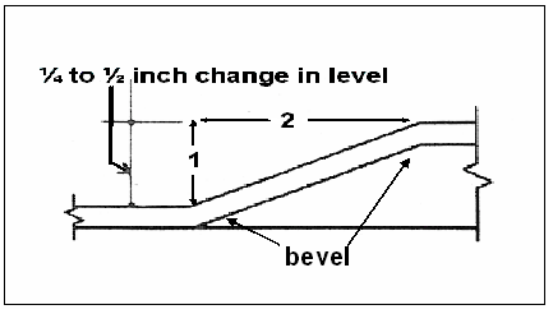

Figure 5

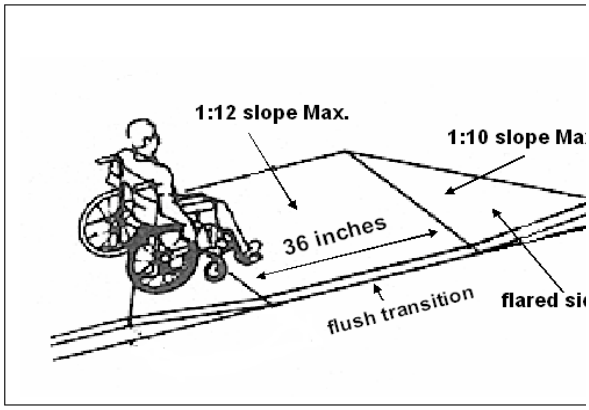

Figure 6

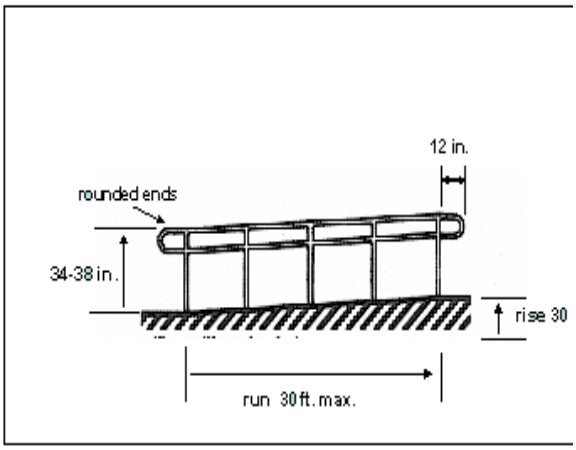

Figure 7

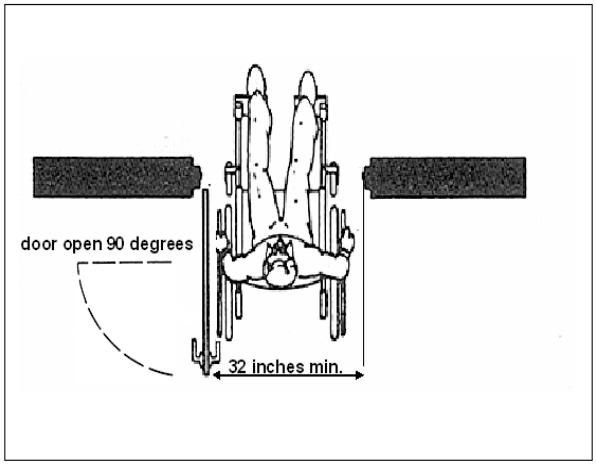

Figure 8

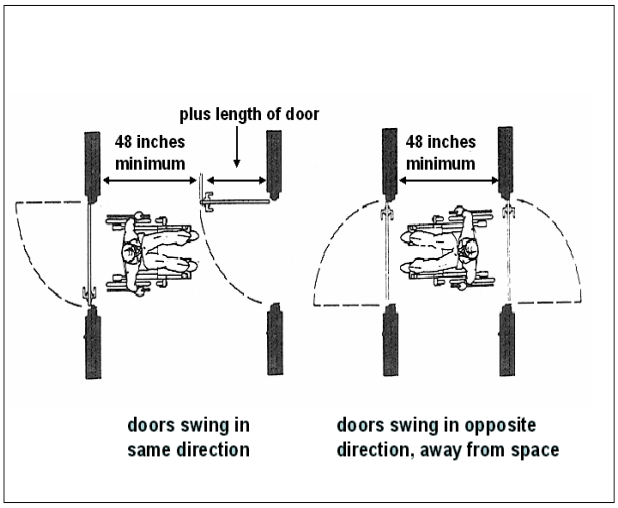

Figure 9

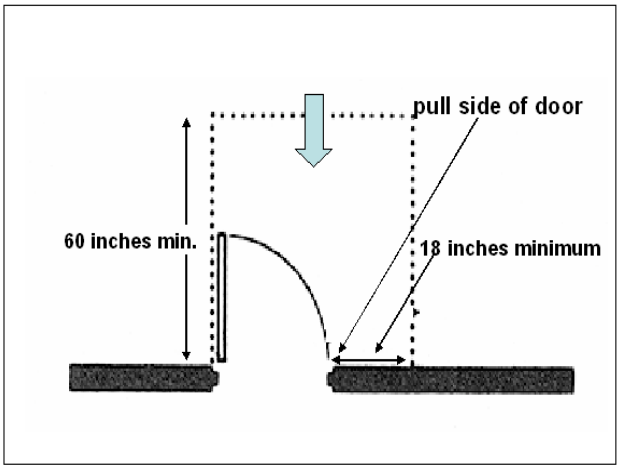

Figure 10

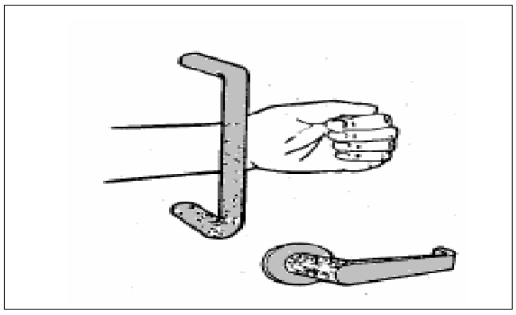

Figure 11

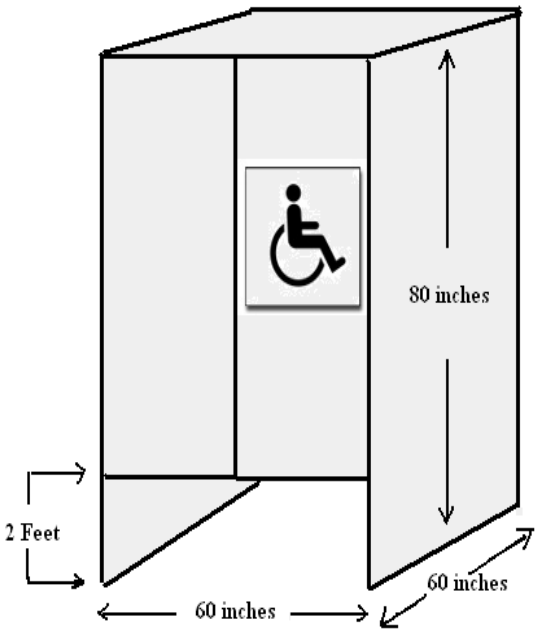

Figure 12

XIII. CHALLENGES

WHO HAS THE RIGHT TO CHALLENGE A VOTER?

Any voter may have his right to cast a ballot in a given election challenged by any registered voter of the same town or ward. Election officials and challengers appointed in writing by the political party committees, or the Attorney General may also challenge a voter. RSA 659:27; 659:27-a; RSA 666:4; RSA 666:5.

WHEN CAN CHALLENGES OCCUR?

Usually challenges occur at the time the voter is at the check-in table before being given his or her ballot. A moderator or clerk may challenge an absentee voter who appears on the checklist, so long as they complete an "Asserting a Challenge" form and enable the supervisors of the checklist to rule on it.. No voter or appointed challenger shall challenge a person's qualifications to be a voter at the registration table. RSA 659:27 III. Challenges may, however, occur at any point up until the ballot is deposited in the ballot box.

HOW DOES A CHALLENGE OCCUR?

A challenge must be made for a specific reason. No challenge may be made unless an "Asserting a Challenge" form is filled out and signed under oath. See "Asserting a Challenge" form at page 144.

CHALLENGERS AT THE POLLING PLACE

Any member of the public has a right to observe the conduct of an election from outside the rail. The public trust in elections, sometimes referred to as the legitimacy of elections, relies in part on elections being conducted in the open. These observers do not have any special

legal status. In contrast, challengers appointed by a state political party or the Attorney General do have a special legal status.

Moderators should ensure that the poll and rail are set up in such a manner that party challengers and any other interested member of the public can see and hear people check in to vote. RSA 666:4. The moderator may ask a challenger to present the appropriate signed statement if he or she is from a political party committee or the Attorney General's Office.

CAN CHALLENGERS KEEP TRACK OF WHO VOTED AND REPORT THIS TO CAMPAIGNS DURING THE DAY?

Yes. The statutes recognize challengers for the purpose of allowing the political parties to designate a person to challenge persons seeking to vote who they believe should not be allowed to vote. The public nature of the election process, however, allows anyone who so desires to monitor people checking in to vote, keeping track on his or her own who has voted, and using this information in any legal manner.

Campaigns will identify voters who are likely to vote for their candidate(s) and will use the process described above to learn who actually showed up at the polls so that they can contact those who do not show up and encourage them to do so.

Individuals conducting this type of activity may seek more direct access to the checklist, to read off who has voted, or may ask to have names repeated more than once after a person announces his or her name for the ballot clerks. Moderators should establish and enforce a uniform policy regarding such requests. While appointed challengers have a right to stand where they can see and hear each voter check in, they do not have a right to disrupt the polling place. Generally, challengers have no right to stop voters until the voter is in line to get a ballot or after they have checked in. Challengers have a right to have the voter announce his or her name aloud and for the ballot clerks to repeat the name two times, but otherwise they have no right to further announcement of the voter's identity.

WHAT IS A PARTY POLL WATCHER?

Challengers appointed by a party to work at a polling place are sometimes, incorrectly, referred to as poll watchers.

BASIS FOR A CHALLENGE

All challenges, including those made by election officials, must be asserted using reasons set forth in the "Asserting a Challenge" form on page 144. A challenge may be asserted only upon personal knowledge or other basis of probable cause that the challenged voter is ineligible to vote.

WHAT IS THE PROCEDURE IF A VOTER IS CHALLENGED?

If the ground for the challenge (including challenges to absentee voters) is age, citizenship, or domicile, the supervisors of the checklist must rule whether or not the challenged voter either is qualified or not qualified. The moderator rules on challenges based on all other grounds. If the voter is found to be not qualified (the challenge is well-grounded), the challenged person may vote only if he or she completes and swears to a Challenged Voter Affidavit. RSA 659:27-a. If the voter is found to be qualified (the challenge is not well-grounded), the person must be allowed to vote without any further action.

Challenged Voter Affidavits must be sworn before any election officer, notary public, justice of the peace or any person authorized by law to administer oaths. If the affidavit is properly signed and sworn to, then the moderator should allow the individual to vote. RSA 659:30.

The ballot of a voter challenged in person is not marked. The ballots of challenged absentee voters are marked. See discussion of challenges to absentee voters below.

The clerk must keep a record of all challenges with the name and address of voters completing the affidavits, the name of the person challenging, who signed the Asserting the Challenge" form, the outcome of the challenge, and the reason for the challenge. RSA657:26; RSA 659:27, RSA659:27-a; RSA 659:32. For successfully challenged absentee ballots, the clerk shall enter this information in the Electio*Net* Absentee Ballot module, by selecting the reasons from the appropriate dropdown. RSA 657:26.

The moderator has a duty to report violations of the election laws to the Attorney General's Office. RSA 659:45. If it is determined that the challenge is well grounded, that is a determination that the person who was seeking to vote violated the wrongful voting statute, therefore, the matter should be reported to the Attorney General's Office. Violations discovered on election day should be reported immediately to 866-

868-3703. A written report on all violations will be required. Reports should be mailed to: Office of the Attorney General, 33 Capitol Street, Concord, New Hampshire 03301.

PRESERVATION OF CHALLENGES

The moderator at the end of the election will turn all Challenged Voter Affidavits over to the town or city clerk who shall preserve the information until the contest is settled and all appeals have expired or at least 22 months after the election, whichever is longer. RSA 33-A:3-a.

CHALLENGED ABSENTEE BALLOTS

Absentee ballots are subject to challenge after the moderator publicly announces the absentee voter's name, but not after the ballot is removed from the envelope.

The challenger (including election officials) must complete an "Asserting a Challenge" form. If the ground for the challenge is age, citizenship, or domicile, the supervisors of the checklist must rule whether or not the challenged voter either is qualified or not qualified. The moderator rules on challenges based on all other grounds. The moderator shall write on the affidavit envelope containing the ballot the word "Challenged" and the name and address of the person making the challenge and the reason. RSA 659:27-a.

The moderator shall number each challenged envelope, i.e. challenge #1, etc. The moderator or supervisors shall determine if the challenge is well grounded.

If YES ('well-grounded' or 'not qualified as a voter') - the moderator does not open the envelope, but shall preserve it with the other ballots cast at the election.

If NO ('not well-grounded' or 'qualified as a voter') - the moderator shall open the envelope containing the ballot, so that the affidavit is not destroyed and proceeds first to mark on the reverse side of the folded ballot the corresponding challenge number as marked on the envelope. Then the moderator will process the ballot like all the other ballots. RSA 659:51.

The moderator shall record next to the name of the absentee voter on the clerk's list of absentee voters the word "Challenged" the name of the person challenging, who signed the Asserting the Challenge" form, the outcome of the challenge and the reason for the challenge. The clerk shall record the applicable information in Electio*Net*. RSA 657:26.

XIV. ELECTIONEERING

The moderator is responsible for ensuring that illegal electioneering does not occur at the polling place. RSA 659:43; RSA 659:44.

The moderator is responsible for establishing a ten-foot-wide no-electioneering zone from the entrance door(s) of the polling place as far into the driveway/parking area as he or she determines appropriate.

Towns may enact local electioneering bylaws that impose additional restrictions. RSA 31:41-c. Such bylaws must be posted at the polling place at least 72 hours in advance of any town election.

The moderator also is made responsible for areas leading from the building entrance door to the room where voting occurs and that room itself.

The New Hampshire Constitution, Part 2, Article 32, RSA 659:9, and RSA 659:43 make the moderator responsible for ensuring that voting is conducted in accordance with the law and grants the moderator substantial authority and discretion for that purpose.

The Attorney General's Office reports that a common complaint is that activities, other than voting, occurring within the building where voting is taking place constitute illegal electioneering. It is strongly recommended that voters have a path starting in the parking lot and leading to and from the railed-in voting area which they can pass through without having to go around or avoid other activities. This path should be free from both electioneering activities and civic or social activities.

There is a longstanding practice in New Hampshire of allowing civic and social activities to occur within the building and room where voting is conducted. Many moderators allow bake sales, meals for election workers, public displays by 4-H or scouts, and/or public information displays on issues not before the voters at the election, to be conducted in the room where voting occurs.

Townspeople, town officials, the media and others often congregate in the public area outside the rail to observe the voting process, discuss current events and socialize.

Particularly during elections that occur during the cold season or on days with inclement weather, moderators often will allow even those people actively involved in electioneering outside the building to come into the room where voting is occurring to warm up in the public areas outside the rail. Moderators must require that signs and other electioneering displays be left outside.

These practices are not prohibited by law, but the moderator has a responsibility to ensure that these activities do not have the effect of electioneering or of discouraging voting.

The moderator shall not allow such activities in the path into and out of the railed voting area. A voter must be able to come to the polling place, cast his or her vote, and leave without having to avoid or turn away from those involved in these activities.

Ideally, all such activities would be located away from the primary path in and out of the voting area such that a

voter has a choice of going to the bake sale or girl scout cookie table or of joining the discussion around the coffee table, but also can exit the polling place without doing so.

Moderators should exercise caution when allowing any kind of activity that involves public education or displays of information on issues of public interest/concern. Particular caution must be exercised if a moderator allows petition or letter signing drives to occur in the room where voting occurs. The best practice is not to allow such activities. Exceptions might exist, but most such activities are properly prohibited pursuant to the electioneering statutes. RSA 659:43; RSA 659:44.

Moderators must ensure that the noise level is kept low in the polling place. Voters must announce their names to the poll workers who staff the in and out tables, voters registering on election day must be able to communicate with the supervisors, and voters in the booths should not be distracted.

Even where activities such as those described above are not explicitly prohibited, often the participants are local residents who are politically active in the community and who are therefore associated with particular candidates or issues coming before the voters. The association between these individuals, particularly if they are candidates on the ballot, and the issues they are advocating for often will create the appearance of electioneering. All such activities should be allowed to occur only in the zone outside the building where electioneering is permitted or in a room separate from the room used for voting or walking to and from the building entrance. The best practice is not to allow any form of activity that is political in nature inside the building.

Town Business. It is commonplace for a voter, upon spotting a selectman or other town official working at the polling place, to want to discuss town business. Public officials who are not performing election officer duties should be encouraged to move to the public areas outside the rail. Public officials who are performing election officer duties have an obligation to avoid discussions that address the pros or cons of any candidate or question before the voters. The appearance of impropriety can be avoided by promptly moving even the most innocent conversations away from the railed in voting area.

ELECTIONEERING BY PUBLIC EMPLOYEES

RSA 659:44-a. "Electioneering by Public Employees. No public employee, as defined in RSA 273-A:1, IX, shall electioneer while in the performance of his or her official duties or use government property, including, but not limited to, telephones, facsimile machines, vehicles, and computers, for electioneering. For the purposes of this section, "electioneer" means to act in any way specifically designed to influence the vote of a voter on any question or office. Any person who violates this section shall be guilty of a misdemeanor."

RSA 273-A:1, XI defines public employee as "any person employed by a public employer except: (a) **Persons elected by popular vote;** (b) Persons appointed to office by the chief executive or legislative body of the public employer; (c) Persons whose duties imply a confidential relationship to the public employer; or (d) Persons in a probationary or temporary status or employed seasonably, irregularly, or on call. . . ."

RSA 273-A:1, X defines a public employer to include the State and any political subdivision thereof.

Local election officials who are responsible for the use of government property and who do not fall within the listed exceptions or who have employees who do not fall within an exception should educate their staff regarding these new limitations. It may be appropriate to include a reference to this statute in employee manuals or handbooks.

XV. NEGLECT, WRONGFUL VOTING AND FRAUD

RSA 659:34 sets forth the consequences of fraud or lying on the voter registration form or on affidavits used to become registered to vote or to vote. The registration and affidavit forms contain a short restatement of the penalties for wrongful voting. This statute authorizes the Attorney General to issue civil penalties under certain circumstances where there is evidence of voter fraud. A person convicted of criminal voting fraud can be fined up to $2000 and be sent to jail for up to one year by a court. The Attorney General can impose a civil penalty up to $5000 on anyone who commits voter fraud.

RSA 659:34 Wrongful Voting; Penalties for Voter Fraud.

"I. A person is subject to a civil penalty not to exceed $5,000 if such person:

(a) When registering to vote; when obtaining an official ballot; or when casting a vote by official ballot, or when applying for a photo identification card for voting purposes, purposely or knowingly, makes a false material statement regarding his or her qualifications as a voter to an election officer or submits a voter registration form, an election day registration affidavit, a qualified voter affidavit, a domicile affidavit, a challenged voter affidavit, an affidavit of religious exemption, an identification card voucher, or an absentee registration affidavit containing false material information regarding his or her qualifications as a voter;

(b) Votes more than once for any office or measure;

(c) Applies for a ballot in a name other than his or her own;

(d) Applies for a ballot in his or her own name after he or she has voted once;

(e) Votes for any office or measure at an election if such person is not qualified to vote as provided in RSA 654;

(f) Gives a false name or answer if under examination as to his or her qualifications as a voter before the Board of Supervisors of the checklist or moderator; or

(g) Presents falsified proof of identity at any election.

II. A person is guilty of a class B felony if, at any election, such person purposefully or knowingly commits any of the acts listed in paragraph I(b) or I(e). A person is guilty of a class A misdemeanor if, at any elections, such person purposefully or knowingly commits any of the other acts listed in paragraph I, and, if the act involved the use of false proof of identity or voting using the name of another person, the person shall be sentenced to a mandatory sentence in the county correctional facility of not less than 30 days for a first offense under this section, 90 days for a second offense under this section, and 180 days for a third or subsequent offense under this section.

III. The attorney general is authorized to impose a civil penalty under paragraph I.

(a) The attorney general may impose a civil penalty by providing written notice to the person:

(1) Setting forth the date, facts, and nature of each act or omission which

makes the person liable to pay a civil penalty;

(2) Specifically identifying the particular provision or provisions of the law involved in each violation; and

(3) Advising the person of each penalty that the attorney general imposes and its amount.

(b) The written notice shall be served in hand or sent by registered or certified mail to the last known address of such person. The person shall have 30 days to pay any civil penalty assessed under this section to the secretary of state for deposit into the general fund.

IV. The decision of the attorney general to impose a civil penalty may be appealed to superior court. An appeal must be filed within 30 days of the date on which the person received it.

V. The attorney general is authorized to institute a civil action to collect a penalty imposed pursuant to this section. The attorney general shall have the exclusive power to compromise, mitigate, or remit such civil penalties."

RSA 659:34-a establishes the offense of voting in more than one state:

"A person is guilty of a class B felony if, at any election, such person knowingly checks in at the checklist and casts a New Hampshire ballot on which one or more federal or statewide offices or statewide questions are listed if the person also casts a ballot in the same election year in any other election held in any other state or territory of the United States where one or more federal or statewide offices or statewide questions are listed. For federal or statewide offices and statewide questions, neither the candidates not the questions need be the same in both jurisdictions for a violation to occur. . . . ." RSA 659:34-a.

RSA 659:40 prohibits the bribing or intimidation of another person in an effort to prevent that person from registering to vote or voting, or to compel him or her to vote in a particular way. A person convicted of bribing, intimidation, or suppression of the vote of another person shall be guilty of a class B felony.

New Hampshire law prevents interfering with communications equipment, in essence making it a misdemeanor to block telephone lines or internet sites. The law also prohibits certain work time and workplace electioneering activities by certain public employees.

RSA 659:40-a, Interference With Communications. "Any person who, on the day of any election, knowingly blocks, or solicits another person to block, the access of any candidate or committee to the candidate's or the committee's communications equipment or services with the intent of interfering with campaign activity shall be guilty of a class A misdemeanor."

A person shall be guilty of a Class B felony if he or she makes telephone calls to a telephone number that they know is being used at the time of the calls to facilitate the transportation of voters to polling places or otherwise to support voting or registering to vote. RSA 644:4.

RSA 666:7-a makes it a misdemeanor to place a telephone call during which the person placing the phone call falsely represents himself or herself as a candidate for office.

CRIMINAL CONSEQUENCES FOR MISCONDUCT

Election officials who knowingly engage in any of the following misconduct may be convicted of a misdemeanor:

- Receiving and counting any illegal vote;
- Omitting to receive or count a legal vote;
- Illegally removing or adding votes to vote totals;
- Otherwise knowingly fail to perform a duty imposed by the election laws;
- Knowingly perform such duty in a way as to hinder the objects thereof; or
- Disclose private information from Electio*Net,* the central voter registration system.

RSA 666:2; RSA 666:3. Other consequences are set forth in particular statutes. Misconduct by election officials in some cases is a felony. Any person guilty of an offense against any provision of the laws relating to elections for which no penalty is specified shall be guilty of a violation. RSA 666:1. A violation is punishable by a fine of up to $1000. RSA 652:1.

If any moderator shall intentionally neglect to cause an accurate count to be made of the votes cast as required by law, which no other penalty is provided, he or she shall be guilty of a violation. If any town or ward clerk shall intentionally neglect to make any return of votes required by law, for which no other penalty is provided, he or she shall be guilty of a violation.

If a return of votes is not timely submitted or is submitted with significant defects, if a recount discloses that the election night vote count was significantly inaccurate, or if other significant deficiencies in the conduct of an election are documented, the Secretary of State shall report this to the Attorney General, and an election monitor shall be appointed. RSA 659:77.

ADMINISTRATIVE COMPLAINT PROCEDURES

The Attorney General's Office is responsible for enforcing the election laws. RSA 7:6-c, RSA 664:18 and RSA 666:8. The Help America Vote Act requires formal administrative complaint procedures.

A HAVA administrative complaint can be filed with the Attorney General, and the Attorney General's Office is the authority for the resolution of complaints of federal voting law violations, pursuant to the Help America Vote Act of 2002. The Attorney General may adopt administrative rules under RSA 541-A to implement the complaint resolution procedures. The ballot law commission is hereby designated as the body providing alternative dispute resolution as required by HAVA Section 402(a)(2)(1). RSA 666:14.

Election officials and voters are welcome to contact the Attorney General's Office by telephone or e-mail. On or immediately before election day, concerns will be addressed promptly on the basis of these informal communications. In most cases a person wishing to make a formal complaint must file a written complaint. A complaint form is available from the Attorney General and can be downloaded from the Attorney General's web site at:

http://www.doj.nh.gov/election-law/complaints.htm

XVI. ABSENTEE VOTING

This is a model notice to be sent to persons requesting absentee ballots who are not yet registered to vote including those who have submitted forms requesting to be registered, but those forms were inadequate or incomplete. This is a model form, not a mandatory form, therefore clerks should feel free to make any changes they feel are helpful.

ABSENTEE - NOT REGISTERED TO VOTE NOTICE

You are not yet registered to vote. If you return your absentee ballot without submitting the additional forms or information described below **your ballot will not be counted!**

To register to vote without appearing before the Supervisors of the Checklist or the Town Clerk you must submit the following forms. I have marked those that have already been received with an X in the left hand column and those that you **must return in the outer envelope** with an X in the right hand column:

You have satisfactorily submitted	Form Required	**You must submit these forms**
	Voter Registration Form	
	Affidavit (Absence from town); or	
	Affidavit (Physical Disability)	
	A copy of a valid New Hampshire Driver's License showing address claimed as domicile on the Voter Registration Form; or	
	A copy of an armed services identification; or	
	A copy of a photo identification issued by the United States government that shows your name and address; or	
	A copy of a current and valid photo identification **and** a copy of a current utility bill, bank statement, government check, paycheck, or other government document that shows your name and the address you are claiming as a domicile in this town.	

To become registered as a voter and to submit an absentee ballot that will be counted you must:

1. Properly complete the forms indicated above;
2. Ensure that you have signed the forms;
3. If you have to submit an Affidavit, ensure that a witness has signed the Affidavit;
4. If you have not previously submitted satisfactory proof of identity and domicile, ensure that you have submitted a readable copy of one of the forms of proof of identity and domicile listed above;
5. Place the forms and proofs of identity in the outer envelope, **not in the affidavit envelope**, and return them with your marked ballot sealed in the inner, affidavit envelope;
6. Ensure that you properly complete and sign the affidavit envelope.

If you have any questions please contact: _____

NOTICE OF REQUIREMENTS TO USE ABSENTEE BALLOT

IMPORTANT NOTICE – PLEASE READ
MAKE SURE YOUR VOTE COUNTS

You have requested an absentee ballot.

You may vote by mail using an absentee ballot only if on election day you will be unable to vote in person because you:

- Will be absent from the town or city where you are registered to vote;
- Cannot appear in public because of observance of a religious commitment;
- Are unable to vote in person by reason of a physical disability; or,
- Are unable to appear at the polls at any time during polling hours because an employment obligation requires you to remain physically at work or to be in transit to or from work from the time the polls open until after the polls close.

If you do not meet one of these requirements, then you may not vote by absentee ballot. If you are not eligible to vote by mail, please do vote in person on election day at your polling place.

For your absentee ballot vote to be counted you must:

- Satisfy one of the requirements listed above;
- Mark your ballot and place it in the envelope provided; and
- Sign the affidavit printed on the outside of the envelope certifying under penalty of voting fraud that you meet one of these requirements. RSA 657:7.

Get-out-the-vote advertising has encouraged voting by mail. If you are qualified and will be unable to vote in person, please do vote by mail. To ensure your vote can be counted please carefully review the requirements for voting by absentee ballot and if you are qualified carefully complete the absentee voter affidavit on the envelope.

The moderator will compare the signature on the written request for an absentee ballot to the signature on the Absentee Ballot Affidavit Envelope and your absentee ballot will be counted only if it appears that the same person signed both documents. Therefore, it is important to use the same signature on each form.

Anyone who votes or attempts to vote under the provisions of absentee voting law, chapter 657, who is not entitled to vote by absentee ballot or anyone who knowingly votes or attempts to vote in violation of this chapter shall be guilty of a misdemeanor. RSA 657:24.
If you have any questions please contact _____.

ABSENTEE REGISTRATION FORM – PERSONS WITH DISABILITIES

State of New Hampshire
ABSENTEE VOTER REGISTRATION FORM
(RSA 654:17)

Enabling Residents Who are *Physically Disabled* to Register to Vote

AFFIDAVIT

I, _____ do hereby swear or affirm, under the penalties for voting fraud set forth below, the following:

1) That my legal domicile is in the town of _____, New Hampshire, I will be of the age of 18 years or over on election day, and am entitled to vote in the election to be held in said town on _____, 20___, except for the fact that my name does not appear on the checklist to be used in said town at such election;

2) That I am unable by reason of physical disability personally to appear before the supervisors of the checklist of said town in their regular sessions for the correction of the checklist for said election;

3) That I hereby enclose one of the following as proof of identity and domicile:
(a) A copy of a current and valid New Hampshire driver's license or an armed services identification or other photo identification issued by the United States government that shows my name and address; or
(b) A copy of a current and valid photo identification and a copy of a current utility bill, bank statement, government check, paycheck, other government document that shows my name and address, or a letter from the administrator of a nursing home or similar facility affirming that I am a resident of that facility that was provided to me at my request pursuant to the administrator's duty to provide such a letter upon my request;

4) That I acknowledge that if I do not provide a copy of proof of identity and domicile as required by section 3) above, this application may not be approved; and

5) That I hereby make application for the addition of my name to the checklist of said town to be used at said election.

_____ _____
Signature of Applicant Date

AFFIRMATION

I, _____, the undersigned witness, do hereby swear or affirm, under the penalties for voting fraud set forth below, that on the____ day of _____, 20____, the above-named _____ having satisfied me as to his or her identity signed the foregoing affidavit in my presence, and did before me swear to (or affirm) the truth of the statements therein contained.

_____ _____
Signature of Witness Date

In accordance with RSA 659:34, the penalty for knowingly or purposefully providing false information when registering to vote or voting is a class A misdemeanor with a maximum sentence of imprisonment not to exceed one year and a fine not to exceed $2,000. Fraudulently registering to vote or voting is subject to a civil penalty not to exceed $5,000.

This form and the Voter Registration Form, when completed, are to be sent directly to the Town or City Clerk of your domicile

7/08

ABSENTEE VOTER REGISTRATION FORM – TEMPORARILY ABSENT

STATE OF NEW HAMPSHIRE
ABSENTEE VOTER REGISTRATION FORM
(RSA 654:17)

Enabling Residents *Temporarily Absent* from Town (City) to Register to Vote

AFFIDAVIT

I, _____ do hereby swear or affirm, under the penalties for voting fraud set forth below, the following:

1) That my legal domicile is in the town of _____, New Hampshire, I will be of the age of 18 years or over on election day and am entitled to vote in the election to be held in said town on _____, 20___, except for the fact that my name does not appear on the checklist to be used in said town at such election;

2) That I do not intend to be present within said town at such time prior to said election as shall enable me personally to appear before the supervisors of the checklist of said town in their regular sessions for the correction of the checklist for said election;

3) That I am temporarily residing in _____
(city and state) or (city, province and country) (zip code)

4) That I hereby enclose one of the following as proof of identity and domicile:
(a) A copy of a current and valid New Hampshire driver's license or an armed services identification or other photo identification issued by the United States government that shows my name and address; or
(b) A copy of a current and valid photo identification and a copy of a current utility bill, bank statement, government check, paycheck, other government document that shows my name and address, or a letter from the administrator of a nursing home or similar facility affirming that I am a resident of that facility that was provided to me at my request pursuant to the administrator's duty to provide such a letter upon my request;

5) That I acknowledge that if I do not provide a copy of proof of identity and domicile as required by section 4) above, this application may not be approved; and

6) That I hereby make application for the addition of my name to the checklist of said town to be used at said election.

_____ _____
Signature of Applicant Date

AFFIRMATION

I, _____, the undersigned witness, do hereby swear or affirm, under the penalties for voting fraud set forth below, that on the _____ day of _____, 20____, the above-named _____ having satisfied me as to his or her identity signed the foregoing affidavit in my presence, and did before me swear to (or affirm) the truth of the statements therein contained.

_____ _____
Signature of Witness Date

In accordance with RSA 659:34, the penalty for knowingly or purposefully providing false information when registering to vote or voting is a class A misdemeanor with a maximum sentence of imprisonment not to exceed one year and a fine not to exceed $2,000. Fraudulently registering to vote or voting is subject to a civil penalty not to exceed $5,000.

This form and the Voter Registration Form, when completed, are to be sent directly to the Town or City Clerk of your domicile

7/08

Voter Registration and Absentee Ballot Request
FEDERAL POST CARD APPLICATION (FPCA)

For any questions about this form, consult the Voting Assistance Guide available in hard copy or on **FVAP.gov** or your Voting Assistance Officer.

Please print in black ink.

For absent Uniformed Service members, their families, and citizens residing outside the U.S.

Classification
Make only 1 selection.
(In most States, you must be absent from your voting district to use this form).

1 I request an absentee ballot for all elections in which I am eligible to vote **AND**:

- ☐ I am a member of the Uniformed Services or Merchant Marine on active duty **OR** ☐ I am an eligible spouse or dependent.
- ☐ I am an activated National Guard member on State orders.
- ☐ I am a U.S. citizen residing outside the United States, and I intend to return.
- ☐ I am a U.S. citizen residing outside the United States, and my return is not certain.
- ☐ I am a U.S. citizen and have never resided in the United States.

Political party

2 Your State may require you to specify a political party to vote in primary elections: _____

Legal name

3 Last name _____ Suffix _____
First name _____ Middle name _____
Previous name (if applicable) _____

Identification
Some States require your full SSN. Check your State's pages in the Voting Assistance Guide on FVAP.gov.

4 State Driver's License or ID _____
OR Social Security Number ___ – ___ – ____
Birth date __ / __ / ____ (M M D D Y Y Y Y) Sex ☐ M ☐ F Race _____ See instructions

Contact information
Include international prefixes. No DSN numbers.

5 Telephone _____
Fax _____
Email _____

Ballot receipt

6 Rank from 1-3 in order of preference; be sure appropriate contact information is provided above.
I prefer to receive my ballot, as permitted by my State, by: ___ Email/Online ___ Mail ___ Fax

Voting residence address
Usually your last U.S. residence or your legal U.S. residence. See instructions.

7 Street Address (not P.O. Box) _____ Apt. # _____
City/Town/Village _____
County _____ State _____ Zip Code _____ – _____

Where to send my ballot
This is your current mailing address and should be different from above. If required, place a forwarding address in Box 9.

8

Affirmation (REQUIRED): I swear or affirm, under penalty of perjury, that:

- The information on this form is true, accurate, and complete to the best of my knowledge. I understand that a material misstatement of fact in completion of this document may constitute grounds for conviction of perjury.
- I am a U.S. citizen, at least 18 years of age (or will be by the day of the election), eligible to vote in the requested jurisdiction, and
- I am not disqualified to vote due to having been convicted of a felony or other disqualifying offense, nor have I been adjudicated mentally incompetent, or if so, my voting rights have been reinstated; and
- I am not registering, requesting a ballot, or voting in any other jurisdiction in the United States, except the jurisdiction cited in this voting form.

Signature X _____

You must sign and send in.

Today's date __ / __ / ____ (M M D D Y Y Y Y)

Witness signature / date if required by your State.
Signature
Date

This information is for official use only. Any unauthorized release may be punishable by law.

PREVIOUS EDITIONS ARE OBSOLETE.

Standard Form 76 (Rev. 08-2013), *OMB No. 0704-0503*

OFFICIAL FEDERAL WRITE-IN BALLOT

Official Federal Write-in Absentee Ballot

Vote by writing the name and/or party affiliation of the candidate for whom you wish to vote. Some States allow the Federal Write-in Absentee Ballot to be used by military and overseas voters in elections other than general elections or for offices other than Federal offices. Consult the Voting Assistance Guide to determine your State's policy.

President/Vice President:

U.S. Senator*:

U.S. Representative/Delegate**/Resident Commissioner**:

* Legal residents of the District of Columbia may vote only for President/Vice President and Delegate.

** Legal residents of American Samoa, Guam, Puerto Rico and the U.S. Virgin Islands may vote only for Delegate or Resident Commissioner to the Congress.

Addendum

If you are eligible to use this ballot to vote for offices other than those listed above or for ballot initiatives, please indicate in the spaces provided below, the office for which you wish to vote (for example: Governor, Attorney General, Mayor, State Senator, etc.). You may also indicate the ballot initiative and your vote for the initiative.

Office / Ballot Initiative	Candidate Name, Party Affiliation, or Initiative Vote

Standard Form 186 (Rev 08-2012)

XVII. OATHS AND AFFIDAVITS

OATH OF OFFICE

WORDS IN THE OATH OF OFFICE. The oath of office is set forth in the New Hampshire Constitution at Part 2, Article 84 {*Alternative language for those scrupulous of swearing set forth in italics in the brackets – the language the italicized words are substituted for is underlined};*

I, (state your complete name) do solemnly swear *{affirm}*, that I will bear faith and true allegiance to the United States of America and the state of New Hampshire, and will support the Constitution thereof. So help me God *{This I do under the pains and penalties of perjury.}*

I, (state your complete name) do solemnly and sincerely swear and affirm {*affirm*} that I will faithfully and impartially discharge and perform all duties incumbent on me as (state office elected/appointed to) according to the best of my abilities, agreeably to the rules and regulations of this constitution and law of the state of New Hampshire. So help me God {*This I do under the pains and penalties of perjury*}.

New Hampshire Constitution, Part 2, Article 84: RSA 42:1; RSA 21:24; RSA 21:25. All town officers must take the (written) oath of office. RSA 669:9.

INDIVIDUALS REQUIRING AND PROVIDING ASSISTANCE

Immediately before each event when a person assists another requiring assistance in voting, the voter requiring assistance should first swear an oath requiring assistance, and the person providing assistance should secondly swear an oath not to influence the voter.

Oath of Individual Registered Voter Requiring Assistance in Voting Pursuant to RSA 659:20.

I, _____ , do solemnly swear (or affirm) that I am unable to mark a ballot and require assistance in voting. See RSA 659:20.

Oath of Individual Providing Assistance to an Individual Registered Voter Pursuant to RSA 659:20.

I, _____ , do solemnly swear (or affirm) that in providing assistance to _____(voter), I shall mark the ballot as directed by him/her and will not unduly influence his/her decision with respect to selecting any candidate or issue presented on the ballot and that I shall thereafter give no information regarding same. See RSA 659:20.

VOTER REGISTRATION FORM - PAGE 2

FOR USE AT THE POLLING PLACE ON THE DATE OF THE STATE GENERAL ELECTION
-- page 2 --

If this form is used in place of proof of identity, age, citizenship, or domicile, I hereby swear that such information is true and accurate to the best of my knowledge.

This form was executed for purposes of proving (applicant shall circle yes or no and initial each item):

Identity Yes/No _____ (initials)

Citizenship Yes/No _____ (initials)

Age Yes/No _____ (initials)

Domicile Yes/No _____ (initials)

_____
PRINT name of Applicant

_____
Signature of Applicant

Sworn before:

_____
Officials who may receive the sworn affidavit: moderator, deputy moderator, assistant moderator, town clerk, deputy town clerk, city clerk, deputy city clerk, ward clerk, selectman, supervisor of the checklist, registrar, deputy registrar, notary public, or justice of the peace

In accordance with RSA 659:34, the penalty for knowingly or purposefully providing false information when registering to vote or voting is a class A misdemeanor with a maximum sentence of imprisonment not to exceed one year and a fine not to exceed $2,000. Fraudulently registering to vote or voting is subject to a civil penalty not to exceed $5,000.

QUALIFIED VOTER AFFIDAVIT

(Identity, Citizenship, Age)
(RSA 654:12)

Please Print: Date: _____

Full Name**:**_____

Name at birth if different: _____

Place of birth: _____

Date of birth: _____

Place of Naturalization: _____

Date of Naturalization: _____

Domicile Address: _____
(Street & House (Apt. Number) (Town or City) (Ward) (State) (Zip Code)

Mailing Address (if different): _____

Telephone number (*requested but optional*) _____

Email address (*requested but optional*) _____

I hereby swear and affirm, under the penalties for voting fraud set forth below, that I am not in possession of some or all of the documents necessary to prove my identity, citizenship, and age and that I am the identical person whom I represent myself to be, that I am a duly qualified voter of this town (or ward), that I am a United States citizen, that I am at least 18 years of age as of this date or will be at the next election, and that to the best of my knowledge and belief the information above is true and correct.

_____
Signature of Applicant

In accordance with RSA 659:34, the penalty for knowingly or purposefully providing false information when registering to vote or voting is a class A misdemeanor with a maximum sentence of imprisonment not to exceed one year and a fine not to exceed $2,000. Fraudulently registering to vote or voting is subject to a civil penalty not to exceed $5,000.

On the date shown above, before me,_____appeared _____
(print name of person sworn before as indicated below) (print name of person whose signature is being notarized/witnessed)

[known to me or satisfactorily proven (circle one)] to be the person whose name appears above, and he or she subscribed his or her name to the foregoing affidavit and swore that the facts contained in this affidavit are true to the best of his or her knowledge and belief.

This affidavit was executed for purposes of proving (check all that apply):

[ ] Identity [ ] Citizenship [ ] Age

_____
(moderator, deputy moderator, assistant moderator, town clerk, deputy town clerk, city clerk, deputy city clerk, ward clerk, selectman, supervisors of the checklist, registrar, or deputy registrar, notary public, or justice of the peace) 9/14

DOMICILE AFFIDAVIT

(RSA 654:12)

Please print: Date: _____

Full Name:
_____

Current Domicile Address: _____
(Street and House (Apt) Number) (Town or City/State/Zip Code) (Ward)

Current Mailing Address (if different): _____
(Street and House (Apt) Number) (Town or City/State/Zip Code)

Telephone Number (requested but optional) _____

Email address (requested but optional) _____

Date when current domicile was established: _____
`Month Year

Place of birth: _____

Date of birth: _____

Address of last previous domicile: _____
(Street and House (Apt) Number)

_____
(Town or City) (State) (Zip Code)

I hereby swear and affirm, under the penalties for voting fraud set forth below, that I am not currently in possession of necessary documents to prove my domicile and that my established domicile is at the current domicile address I have entered above. I understand that a person can claim only one state and one city/town as his or her domicile at a time. A domicile is that place, to which upon temporary absence, a person has the intention of returning. By registering or voting today, I am acknowledging that I am not domiciled or voting in any other city/town, and that to the best of my knowledge and belief the information above is true and correct.

_____
(Signature of applicant)

In accordance with RSA 659:34, the penalty for knowingly or purposefully providing false information when registering to vote or voting is a class A misdemeanor with a maximum sentence of imprisonment not to exceed one year and a fine not to exceed $2,000. Fraudulently registering to vote or voting is subject to a civil penalty not to exceed $5,000.

On the date shown above, before me,_____appeared _____
(print name of person sworn before as indicated below) (print name of person whose signature is being notarized/witnessed)

[known to me or satisfactorily proven (circle one)] to be the person whose name appears above, and he or she subscribed his or her name to the foregoing affidavit and swore that the facts contained in this affidavit are true to the best of his or her knowledge and belief.

_____
(moderator, deputy moderator, assistant moderator, town clerk, deputy town clerk, city clerk, deputy city clerk, ward clerk, selectman, supervisors of the checklist, registrar, or deputy registrar, notary public, or justice of the peace) 9/14

CHALLENGED VOTER AFFIDAVIT

(RSA 659:27, 28-32, 652:14)

I,_____, do solemnly swear (or affirm)
(Print name of Voter)
under penalties of voter fraud, that I am the identical person whom I represent myself to be, that I am a duly qualified voter of this town (or ward), and have a legal domicile therein.

My telephone number (requested but optional) is _____ and my Email address (requested but optional) is _____.

_____
(Signature of Voter)

Check one election:

- ☐ Town/ City Election Date:/_____/___
- ☐ State Special Election Date:/_____/___
- ☐ State Primary Election – September 9, 2014
- ☐ State General Election – November 4, 2014

the said _____ took and subscribed the above oath before the below-named officer.

_____
(Moderator, deputy moderator, assistant moderator, town clerk, deputy town clerk, city clerk, deputy city clerk, ward clerk, selectman, supervisor of the checklist, registrar, or deputy registrar, notary public, or justice of the peace)

August 2014

STATE OF NEW HAMPSHIRE
ASSERTING A CHALLENGE
(RSA 659:27-a)

No challenge may be asserted except in the form of a signed affidavit, under oath administered by an election official, in the following form:

Name of Person Making the Challenge (Please Print):

_____
Last Name First Name Middle Name (Jr., Sr., II,III)

Party affiliation: _____

If person making the challenge is a voter: Physical Address – Street Name & Number

_____
Street Number Street Name Apt/Unit City/Town Ward Zip Code

If person is a political party or attorney general appointee: **Mailing Address & Phone Number:**

_____ _____
Mailing Address Phone Number

INFORMATION ON THE VOTER BEING CHALLENGED

The person making the challenge shall complete the following:

Name being used by the voter who you wish to challenge (Please Print):

_____
Last Name First Name Middle Name

GROUNDS FOR THE CHALLENGE:

The person making the challenge shall indicate the grounds on which the challenge is made

(check all grounds that apply)

____ The person seeking to vote is not the individual whose name he or she has given.
____ The person seeking to vote has already voted in the election (name the polling place) _____at approximately (state the time if known)_____.
____ The person seeking to vote is disqualified as a voter by conviction of a willful violation of the election laws (state offense, court, and date of conviction)_____.
____ The person seeking to vote is under 18 years of age.
____ The person seeking to vote is not a United States Citizen.
____ The person seeking to vote is not domiciled in the town/ward where he/she is seeking to vote (state person's true domicile – town/city) _____.
____ The person seeking to vote does not reside at the address listed for that person on the checklist.
____ The person seeking to vote is an incarcerated convicted felon who is currently sentenced to incarceration (state the name of the institution person is in)_____.
____ This is a primary and the person seeking to vote in the (state political party name) _____ primary is not a declared member of the party he/she claims to be affiliated with.
____ The person seeking to vote is ineligible to vote pursuant to the following state or federal statute or constitutional provision: _____.

TURN OVER TO CONTINUE

BASIS FOR THE CHALLENGE: The person making the challenge shall state the specific source of the information or personal knowledge upon which the challenge of the particular individual is based:

_____

_____

_____

OATH: The person making the challenge shall complete the following**:**

I hereby swear and affirm, under the penalties of perjury, that to the best of my knowledge and belief the information above is true and correct. _____ _____

(Signature of Challenger) (Date)

On the date shown above, before me _____

(print name of notary public, justice of the peace, election officer)

appeared _____, known to me or satisfactorily proven

(print name of person whose signature is being notarized)

(circle one) to be the person whose name appears above, and he/she subscribes his/her name to the foregoing affidavit and swore that the facts contained in this affidavit are true to the best of his/her knowledge and belief.

_____ _____

Notary Public / Justice of the Peace / Official Authorized by RSA 659:30 Date

---

TO BE COMPLETED BY THE MODERATOR

Ruling on the challenge: If the ground at issue is age, citizenship, or domicile: The supervisors of the checklist have ruled that the challenged voter is **(check one)**:

____ qualified as a voter ____ not qualified as a voter.

The moderator rules on challenges based on other grounds. The moderator rules that the challenge is **(check one)**:

____ well grounded ____ not well grounded.

If the moderator rules that the voter is not qualified or that the challenge is well grounded, the challenged person may vote only if he or she completes and swears to a challenged voter affidavit.

XVIII. ELECTION DAY FORMS, SUPPLIES, SEALS

ELECTION SUPPLIES - SAMPLE LIST

For each town or ward:

- Ballot Box (1)
- Stapler
- Staple Remover
- Ballot Markers
- Pencil Sharpener
- Black Pens (8)
- Note Pad
- Red Pens (4)
- Fasteners
- Regular Pencils (10)
- Lights for ballot (1 each booth)
- Magnifying devices (1 each booth)
- Rulers (4)
- Scissors
- Rubber Fingers
- Padlock & Keys (1)
- Alphabet Tabs
- Masking Tape
- String
- Paper Clips
- Manila Folders (5)
- Filament Sealing Tape
- Refer to Moderator's list on page 60
- Thumb Tacks
- Electrical Strip
- Extension Cord
- Rubber Bands for Ballot Separation
- Organizer Box
- Letter Opener
- Magic Markers
- Rail – State Plastic Rail Tape or Rope/Ribbon to establish a guard rail around the voting area
- Scotch Tape
- Ward Map
- Carbon Paper
- Printing Calculator
- Privacy Folders for Ballots (where ballot counting devices are in use)
- Sticky Notes for Ballot Piles Identification
- Red Security Tape (Sealing Ballots)
- Signs – (See pages 153 – 159)
- Flag
- Clip boards (10)

ELECTION FORMS & DOCUMENTS CHECKLIST

Certified Checklists in (and out) lists

Checklist (1) Posting

Sealed Box of Official Ballots

Absentee Ballot List from Electio*Net*

Absentee Ballots

Absentee Ballot Applications

Attorney General Inspector's Polling Place Compliance Checklist

Notice to Voters

Sample Ballots

Voter Instructions

Purity of Election Laws

Voter Registration Forms, with Page 2 (affidavits) for General Elections, page 140

Ballot Clerk Procedure, page 160

Explanatory Document – Voter ID Law (effective August 13, 2014) from http://sos.nh.gov/ElecOff.aspx

List of schools and colleges which provide valid student identification for voting purposes, from http://sos.nh.gov/ElecOff.aspx

Types of Documentation Authorized by N.H. Law for Voter Registration and Election Day Check-In, page 180

Challenged Voter Affidavits, page 143
Asserting a Challenge form, page 144

Qualified Voter Affidavits, page 141 (or Voter Registration Form, Page 2, in General Election, page 140)

Domicile Affidavits, page 142 (or Voter Registration Form, Page 2, in General Election, page 140)

Return of Votes Form

Moderator Certificate & Ballots Cast Form

Tally Sheets

Moderator's Worksheet, page 170 and Spreadsheets

Label for Resealing Ballots

Payroll Forms

Oath of Office Forms

W-4 Forms

See Moderator's list on page 60

See SOS list on page 18

See Signs on page 153

State of New Hampshire – Secretary of State

Electronic Ballot Counting Device Standard Operating Procedures For Testing and Security Seals (RSA 656:42)

Version 1.4 10-06-2012

Seal Types:

- Wire Wind-Up Security Seal
- Tamper Evident Labels (Tape Seals)

Seal Locations:

- One wire seal must be fully tightened attaching the 2 zippers on the closed canvas cover storing the counting device.
- One wire seal must be fully tightened on the metal bar in front of the memory card slot.
- Tamper Evident Label seals must be placed in the following three locations:
  1. One seal affixed on the seam connecting the two hard shell covers on the front of the counting device.
  2. One seal affixed on the seam connecting the two hard shell covers on the rear of the counting device.
  3. One seal affixed over the 3 communications ports in the rear of the counting device.

SOS Activity Log and One Access Log:

- Canvas Bag SOS Activity Log
- Counting Device SOS Activity Log
- Memory Card SOS Activity Log
- SOS Access Log
  - A list of all individuals who have access to the safe where the memory cards are stored.
  - A list of all individuals who have access to the secure area where the counting devices are stored.

Procedures:

- The city or town clerk shall update a SOS Activity Log supplied by the Secretary of State to keep a record each time a seal is broken, a new one installed and the reason for which the seal was broken or installed. The SOS Activity Log shall be kept in the outside pocket of the canvas bag which contains the counting device.

- No person shall break or install a seal without the presence of 2 witnesses. Upon breaking or installing such seal, the person responsible shall update the appropriate SOS Activity Log, obtain the signatures of two witnesses, record the reason for breaking or installing such seal, properly record the seal number in the SOS Activity Log, and replace the SOS Activity Log in the front pocket of the canvas bag for the counting device.

- NH SOS Security Upgrade Form confirms:
    - Accuvote-OS Precinct Count firmware chip has been upgraded to the 1.96.13 firmware chip
    - Whether the counting device uses visible light read heads
    - Disconnection of modem, if present
    - Cutting of the two telephone cables
    - Disconnection of the communication port ribbon cable
    - Removal of all pins from the external communication port
- The canvas bag of each counting device must have a tag that indicates the serial number of the counting device inside.
- The counting device, the Security Upgrade Form, SOS Access Log and the SOS Activity Log shall be subject to review by the Attorney General or Secretary of State at any time.

Memory Card (Installing):

Whenever the town or city clerk receives a memory card from the memory card programmer, the clerk shall record on the SOS Activity Log the:

- Breaking of the canvas bag seal
- Breaking of the metal bar seal in front of the memory card slot
- Record the memory card number on the back of the memory card
- Insertion of the memory card into the memory card slot
- Installation of a new seal on the metal bar in front of the memory card slot
- Installation of a new seal on the canvas bag
- The clerk shall store any memory card not inserted into a counting device into a safe and record the names of individuals that have access to such safe on the SOS Activity Access Log

Memory Card (Removing):

Whenever the town or city clerk removes the memory card from the counting device, the clerk shall record on the SOS Activity Log the:

- Breaking of the canvas bag seal
- Breaking of the metal bar seal in front of the memory card slot
- Removal of the memory card
- Installation of a new seal on the metal bar in front of the memory card slot
- Installation of a new seal on the canvas bag
- Immediately return the memory card to the memory card programmer

Maintenance, Storage & Counting Device Replacement:

- The vendor shall follow the SOS Activity Log seal procedure when performing routine maintenance on the counting device.
- Confirm that the canvas bag of each counting device has a tag that indicates the serial number of the counting device inside.
- While in a secure storage area, the metal bar in front of the memory card slot and the canvas bag shall be sealed at all times.

- If a counting device is replaced, the clerk shall retain and store the SOS Activity Log from that Device.
- If a counting device is replaced by the vendor, the clerk shall first test the replacement counting device using the SOS testing instructions and affix the appropriate seals.
- The clerk shall maintain an up-to-date SOS Access Log for the secure storage area and record the names of individuals that have access to the secure storage area.

Back-up Counting Devices:

- Seals shall be affixed in the appropriate locations on all back-up counting devices. All cases shall contain the SOS Activity Log.

Testing Instructions:

- Upon receipt of the official ballots from the Secretary of State, the clerk shall remove the number of ballots needed (the Secretary of State recommends fifty ballots per election) from among the official ballots for testing the electronic ballot counting device and keep those test ballots separate and secure from the remaining official ballots thereafter.
- The clerk should subtract the test ballots from the ballot inventory of official ballots received from the Secretary of State that is used to report election results and record this entry on the election reporting form.
- The clerk shall mark in red any ballots used for testing with the words "TEST".
- The clerk shall give public notice of the date and time of a pre-election test of the electronic ballot counting device and test ballots.
- Memory cards shall be tested with the test ballots from a jurisdiction before the memory card and official ballots are used in that jurisdiction.
- The clerk shall mark the test ballots in such a way as to demonstrate a vote for each candidate on at least one test ballot, as well as votes for less than and more than the number of candidates that may be voted for an office, write-ins, multiple votes for a candidate who appears in more than one party column for the same office on a general election ballot, and ballots on which there are no votes. The clerk shall mark as many as possible of the combinations of choices that a voter may indicate on the ballot.
- The clerk shall run each of the test ballots through the counting device in the following orientations:
    - Top First with side one face up
    - Bottom First with side one face up
    - Top first with side one face down
    - Bottom first with side one face down
- The clerk shall hand count the votes marked on the test ballots run through the electronic ballot counting device and multiply the results by 4 to account for the 4 different orientations, and check these results against the tally from the electronic ballot counting device.
- If your test results do not match your hand count results, contact the Secretary of State's Office and LHS immediately.
- If a new configuration of an electronic ballot counting device and/or memory card is used in its place, it shall be subject to a full cycle of testing and shall not be used at an election unless the results match the hand count of the clerk.

- If the electronic ballot counting device's tally does not match the hand count of the clerk, the clerk shall notify the moderator, who shall order that the electronic ballot counting device not be used at the election.
- The pre-election test shall be completed no later than the Wednesday immediately prior to the election.
- The clerk shall document and preserve the pre-election test results in a secure location:
    - The test ballots.
    - The hand count of votes on the test ballots signed by the clerk.
    - The tape results from the electronic ballot counting devices signed by the clerk.
- The clerk shall test all electronic ballot counting devices and memory cards in the possession of the town or city to be used in said election.

Election Day - Moderator:

- Prior to placing the electronic ballot counting device or any memory card into service in an election, the moderator shall certify that there is evidence that pre-election testing was conducted on each electronic ballot counting device and each memory card in the clerk's possession, and that these devices and cards have passed the test.
- Upon receiving possession of a counting device on election day, the moderator shall verify all counting device seals have remained intact and verified the seal numbers on the counting device with the seals recorded on the appropriate SOS Activity Log. Any seals which have been broken should be properly re-sealed, recorded and signed in the SOS Activity Log according to the correct procedure.
- During election day, if the moderator notices that any seal on the counting device appears tampered with or broken, without an adequate record in the SOS Activity Log, the moderator shall refrain from using the counting device in that election and shall report the apparent tampering to the Attorney General, the Secretary of State, the town or city clerk, and the selectmen.

SEAL ON BOX CONTAINING BALLOTS

STATE OF NEW HAMPSHIRE

Label for Resealing Ballots

BOX __1__ OF __2__ .

This Package Contains

__1358__ CAST BALLOTS
___2___ CANCELLED BALLOTS
__82__ UNCAST BALLOTS

Enclosed are the ballots from the state election held in the town of

_____

(or, ward _____ in the city of _____ held on the _____ day of _____, 20_____ required by RSA 659:95 to be preserved.

_____
Moderator or Designee

_____
Selectman or Designee

_____
Selectman or Designee

_____
Selectman or Designee

RECEIVED _____
(date)

at _____
(minute of the day and hour)

_____
TOWN CLERK or CITY CLERK or Designee

The office of the Town Clerk will be closed on Election Day.

Voters Register Here

Voter

Check-In

No Photo ID?

Start Here

You must announce your name to the Ballot Clerk

RSA 659:13

Previously undeclared voters who wish to return to undeclared

If you wish to use the Accessible Voting System, ask an election official.

BALLOT CLERK PROCEDURE *(RSA 659:13)*

November 04, 2014 State General Election

Before Voters are allowed in the voter check-in (Ballot Clerk) line, election officials should ask them if they are a registered voter, inform them of the Voter ID law and direct them to the correct line or table.

Before a Voter is allowed into the area within the guardrail to vote:

2. The Voter shall announce his or her name to the Ballot Clerk.
3. The Ballot Clerk shall repeat the name given by the Voter.
    a. If the Voter's name is NOT found on the checklist, the Ballot Clerk shall direct the Voter to the Supervisors of the Checklist/Registrars.
    b. If the Voter's name is found on the checklist, the Ballot Clerk shall, using a ruler, put a check mark ✓ beside the name and repeat the name again.
4. The Ballot Clerk shall then state the domicile/mailing address for the Voter that is listed on the checklist and ask the Voter if the domicile/mailing address is correct
    a. If the domicile/mailing address is NOT correct, and the Voter's current domicile address is within the same town or ward, the Ballot Clerk shall correct the address(es) in **RED** on the paper checklist to reflect the correction.
    b. If the domicile/mailing address is NOT correct, and the Voter's current address is NOT within the same town or ward, the Ballot Clerk should inform the Voter that he or she is not at the correct polling place and that he or she can only vote where they are domiciled.
5. The Ballot Clerk shall request the Voter present a valid photo ID in the form of:
    a. A driver's license issued by any state or the federal government;
    b. A non-driver's license issued by any state;
    c. An ID card issued by NH DMV for voting purposes only;
    d. A United States Armed Services ID card;
    e. A United States Passport or Passcard;
    f. A NH Student ID card;
        i. An acceptable student photo ID card issued by: (The Department of Education list is available on the Secretary of State's website - www.sos.nh.gov)
            1. A college, university or career school approved to operate or licensed to operate in New Hampshire;
            2. A public high school in New Hampshire;
            3. A nonpublic high school in New Hampshire accredited by a private school accrediting agency that is recognized by the NH Department of Education;
            4. Dartmouth College;
            5. A college or university operated by the university system of New Hampshire or the community college system of New Hampshire.
        ii. The card has either an expiration date or an issuance date that has NOT exceeded 5 years;
        iii. EXCEPTION: Student ID cards without a date of expiration or issuance will be accepted until September 1, 2018.

g. A photo ID not mentioned above, but determined to be legitimate by the Moderator, Supervisors of the Checklist or Clerk of a town, ward or city.

h. Verification of the person's identity by the Moderator, a Supervisor of the Checklist or the Clerk of a town, ward or city. (Not a Ballot Clerk)

6. A valid photo identification shall show:
   a. Name and photo of the individual.
      i. The name shall substantially conform to the name of the individual on their voter registration record.
   b. The photo identification shall also have an expiration date that has not been exceeded beyond 5 years.
      i. Exception: a voter 65 years or older may use an acceptable ID without regard to the expiration date.
7. If the Voter does NOT present a valid photo ID, the Ballot Clerk shall tell the voter they will be permitted to vote if they complete a "Challenged Voter Affidavit" (CVA).
8. If the Voter presents a "CVA" to the Ballot Clerk, the Ballot Clerk shall put a check mark ✓ in the "CVA" box on the checklist to the right of the Voter's name.
9. The Ballot Clerk shall take the "CVA" from the Voter and place it in a folder or container marked for this purpose.
10. The Voter, if still qualified to vote in the town or ward and having presented an acceptable photo ID or completed a "CVA", and unless challenged as provided for in RSA 659:27 through 659:33, shall then be allowed to enter the space enclosed by the guardrail.
11. The Ballot Clerk gives the Voter the appropriate ballot(s).

After a Voter is allowed into the area within the guardrail to vote:

12. The Ballot Clerk uses a ruler or straight edge to mark the checklist to indicate that the Voter has obtained his or her ballot. We recommend crossing out the last name of the Voter on the checklist, which requires a second look at the Voter's name and the use of the ruler, for example, ~~Jones~~, John.
13. Absentee Voters shall be marked in **RED INK** with the letters **A.V.** (RSA 659:52)
14. After the Moderator and Clerk no longer require access to the checklist for election reporting purposes, the Supervisors of the Checklist should scan the bar codes of those Voters marked on the checklist as having checked in, picked up a ballot **and** if the Voter signed a CVA. Hence, scanned Voter names would have both a check mark and the last name crossed out. See example below.

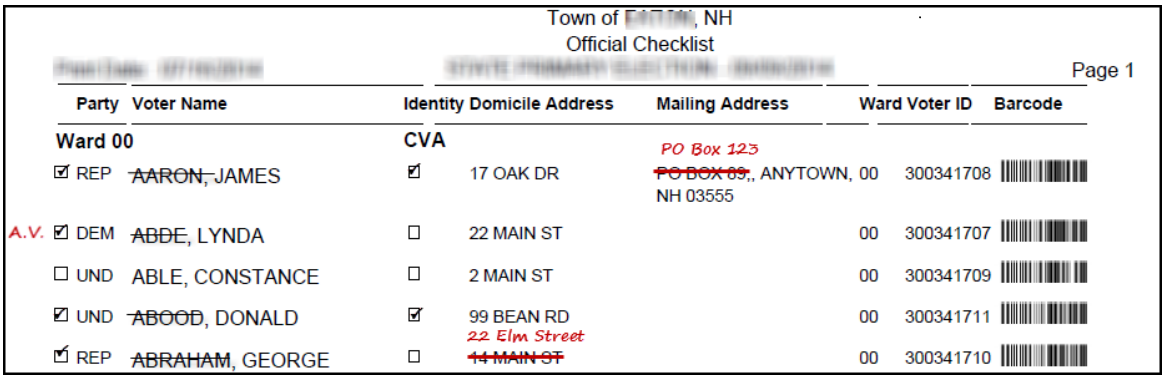

Town of [illegible], NH
Official Checklist

Page 1

	Party	Voter Name	Identity	Domicile Address	Mailing Address	Ward	Voter ID	Barcode
	Ward 00		CVA					
	☑ REP	~~AARON,~~ JAMES	☑	17 OAK DR	PO Box 123 ~~PO BOX 65~~,, ANYTOWN, NH 03555	00	300341708	
A.V.	☑ DEM	~~ABDE~~, LYNDA	☐	22 MAIN ST		00	300341707	
	☐ UND	ABLE, CONSTANCE	☐	2 MAIN ST		00	300341709	
	☑ UND	~~ABOOD~~, DONALD	☑	99 BEAN RD		00	300341711	
	☑ REP	~~ABRAHAM~~, GEORGE	☐	22 Elm Street ~~14 MAIN ST~~		00	300341710	

Page 2 of 2 v3

COUNTING INSTRUCTIONS – MODEL 1

Sort-and-Stack Method

The Secretary of State relies upon a variation of the sort-and-stack hand counting method below for recounting simple races, based on observation and performance in recounting well over 1 million ballots.

This sort-and-stack method is considered the more accurate and easy method by the counters themselves, since each mark is often reviewed more times than other methods, staff requirements are less, and mistakes are easier to notice and avoid. The sort-and-stack method is not used by the Secretary of State in recounts for races with multiple winners. However, this process has been used effectively by some towns to count multi-member representative races.

Overview of Sort and Stack Method

- Ballots are sorted into piles before they are counted
- One pile for identical votes in that race
  - Each candidate or alternative on a question
  - Overvotes (When the voter selects more choices than allowed in a contest, the number of choices the voter has sacrificed in this race)
  - Undervotes (skipped choices)
  - Write-ins
  - Judgment calls for the moderator and election team

Using the Method

- Counters and observers are looking at only one candidate or question on the ballot at a time;
- Counters' and observers' eyes do not have to move to different locations on the ballot and on the tally sheet;
- When looking for only one mark on one precise location on the ballot, it is harder to make mistakes.

Rule of Thumb: 3 Sets of Eyes voter choice

- Aim for at least 3 sets of eyes on each ballot choice;
- Using a 2-person team, that might mean that the 2 members sort ballots simultaneously into the same piles and each looks at the ballot choices as he or she counts each stack;
- The 2 members count each pile independently and record and check the sum on the tally sheet.

Distributing Ballots to Teams

- Open the ballot box in view of the public.
- Moderators place an established quantity of ballots - say 200 – on each table assigned to a counting team;
- The 2 team members count the ballots in batches of 50;

- If it becomes necessary to redo a particular part of the process because the results do not equal the number of ballots, counters can afford to recount 50.

Start Counting Ballots

- Team members should look at each ballot as they place it into the correct pile;
- Once the table has the first 50 ballots assigned to it sorted into these six piles, start the counting process with the pile of ballots for the first candidate on the ballot.

Counting Ballots

- One team member counts the ballots in the first candidate's pile into groups of ten;
- The member stacks each group of ten ballots and the remainder at right angles to each other on the same pile, allowing an easy count by "tens" for the entire stack;
- The second team member counts the same pile independently;
- The 2 members resolve any "Questions" by calling the moderator to determine voter intent.
- Both counters independently count each pile, agree on the number for each candidate, and enter it in the tally sheet.

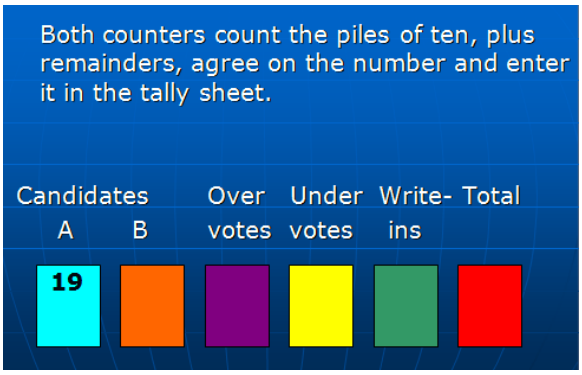

- Any discrepancies discovered along the way are mostly resolved by checking the last 10 ballots, rather than a larger number that would take some time to backtrack for resolution.

Next Candidate, Same Contest

- When finished with the first candidate, members begin counting the next candidate in the same contest;
- Each of the piles is independently counted by the 2 team members, with each looking at the mark on each ballot;

- Team members agree on the number to enter on the tally sheet.

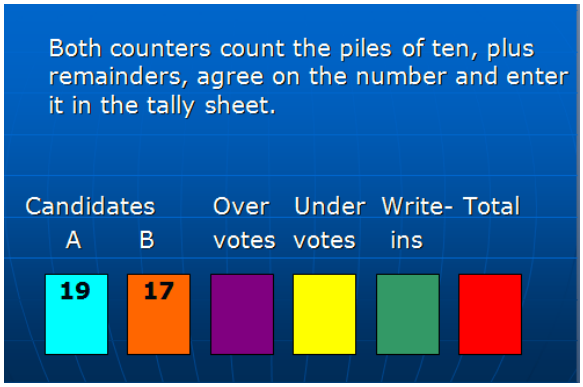

Same contest – 3rd candidate

- If there is another candidate in that contest, each team member counts the pile for that candidate and they agree on the number to enter on the tally sheet.

Same Contest, Counting the Piles of Undervotes and Overvotes

- Counters independently count the piles for undervotes and overvotes and agree on the numbers to enter on the tally sheet.
- The team should add the votes for each candidate, write-ins, and the number of undervotes (skipped choices) and overvotes (sacrificed choices when the voter votes more choices than allowed) in that contest.
- Enter the total in the far right column of each row. It should equal 50**,** the batch size the team began with in this step**.**

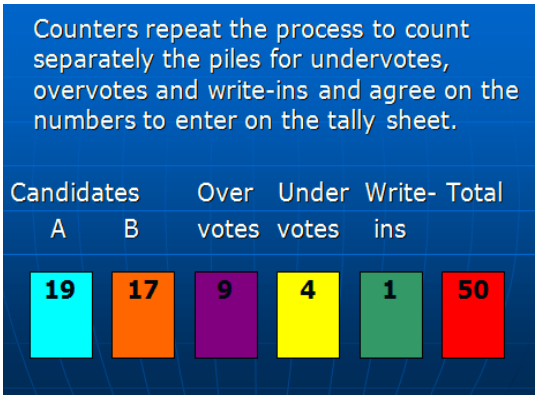

Keeping Track of Stacks

- When the count for the batch of 50 ballots is complete, contain the batch with an elastic to identify it has been counted.

Tallying

- Tally sheets should be turned in - after the numbers equal 50 on the far right, and the aggregate of votes equals 200 on the bottom right;
- This number, e.g. 200 ballots, should match the number of ballots that the table started with;
- Tally sheets should be signed by the 2 team members before being turned in;

- The moderator should designate someone who routinely works with figures to ensure ongoing reconciliation by each table.

Tally Sheet – single contest

	Candidate A	Candidate B	Candidate C	Under-vote	Over-vote	Write-ins	TOTAL
1st group of 50 ballots	19	17	9	4	1	0	50
2nd group of 50 ballots	17	22	8	3	0	0	50
3rd group of 50 ballots	16	18	11	3	1	1	50
4th group of 50 ballots	18	20	9	2	0	1	50
TOTALS	70	77	37	12	2	2	200

COUNTING INSTRUCTIONS – MODEL 2

All Offices Read-and-Mark (Ballot-by-Ballot) Method

This is a model describing how some moderators have chosen to count ballots. State law authorizes the moderator to choose the system of hand counting to be used and to supervise the counting. RSA 659:60. This model is presented as one example of an acceptable practice, however, neither state law nor the Secretary of State require that any particular system of counting be used. Moderators should ensure that the system of counting they adopt is accurate and efficient.

Step #1 – Close the Polls.

Step #2 – Verify that all absentee ballots have been processed.

Step #3 – Rearrange the polling place for counting. Counting tables must be at least 4 feet from the rail. All counting, however, must occur where it is visible to members of the public located outside the rail.

Step #4 – (Optional whether done election night or later) Have the supervisors count the number of registered voters (including those who registered on election day) who are checked off as having voted on the checklist.

Step #5 – Identify all the people who will be counting. Identify those people who will be counting who are not election officials and who have not taken an oath of office.

Step #6 – Swear in these non-election officials as election officials (inspectors of election pro tempore). RSA 658:7 gives the moderator authority to appoint such election officials as he or she deems necessary. As election officials, the volunteer ballot counters are swearing or affirming that they will perform their duties lawfully and they become subject to criminal prosecution for official misconduct pursuant to RSA 666:3.

Step #7 – Read the instructions for counting to all the election officials who will be counting.

Step # 8 - Open the ballot box(es) in view of the public. Place similar quantities of ballots on the table to be used by each counting team.

Step #- 9 - Have the counting teams count the ballots into piles of a known size (10, 25, 50 or 100 ballots).

Step #10 – Wrap each pile with a rubber band, clip it with a large binder clip, or stack them crosswise.

Step #11 - Prepare a tally sheet. (Tally sheets should be prepared ahead of time.) The sheet should be organized in the same order as the ballot, with sections for each office or question and the name of each candidate listed in the same order as they are listed on the ballot. There should be a space following each name/question for one of the counters to put a hash mark for each vote for that candidate/question. See sample election tally sheet at page 169.

Step #12 – Overview of the counting process: Each counting team will usually count all races and questions in one pile of 50 ballots at a time. A mark must be made on the tally sheet for each ballot for each office or question. Make a vertical line for the first four votes for any given candidate and then cross a horizontal line over the vertical lines for the fifth vote for that candidate. If the voter wrote in a candidate, that name should be written in on the tally sheet.

If the voter skipped a race or question, that is they did not vote for any candidate or did not mark either "yes" or "no", put a hash mark in the "undervotes" line for that office on the tally sheet. If the voter overvoted, that is they voted for more candidates than they are permitted, put a hash mark in the "overvotes" line representing the number of choices the voter gave up by overvoting.

The objective will be that when the team is done counting the 50 ballot pile it will be able to total the hash marks for each candidate or question. The team will then total the votes for all candidates for each office and all the "yes," "no," write-ins, undervotes, and overvotes for each question. The total votes for a single seat office must equal 50 votes for that office (including the votes for each candidate, write-ins, undervotes and overvotes). For offices where the voter may vote to fill two positions (for example where the race is for state Representative where voters get to choose two), the total votes counted should total up to 100. For offices where the voter may vote to fill three positions, the total votes counted should total 150, and so on. If the total does not equal 50, the team should check their hash marks for that office/question and correct any errors. The team is done counting a 50 ballot pile at the point when the office/question totals equal 50.

If there is any question from a team regarding how a ballot should be counted, teams should call the moderator to your table and seek his or her instructions on how the ballot should be counted.

If a ballot is marked for any office or question in a way that does not leave the intention of the voter clear or if after getting basic instructions on how different marks are counted from the moderator there is disagreement who are counting a particular ballot for a particular office a vote should be taken of the election officers present and counting votes. RSA 659:64. The moderator should call together the election officers, discuss the ballot in question and take a vote on the intent of the voter. The majority rules, and if no alternative receives a majority of the votes, the ballot shall be treated as defective for that office or question.

If there are many questioned ballots that need to be voted on, the moderator may choose to hold these ballots aside and vote on several at one time. If this is done, however, it is the best practice that all questionable ballots be voted on before the team totals are tallied up. This ensures that the election officials do not know whether the vote on a particular ballot will affect the outcome of the election. This process reinforces the neutrality and enhances the legitimacy of the counting process.

Step #13 Starting with the first office on the ballot, one counting team member (the reader) should read off the name of the candidate (the word "yes" or "no" for questions) who received the vote on the ballot being counted. The second member of the ballot counting team (the marker) should make a hash mark beside that name on the ballot. If the moderator can staff each team with three counters, the third counting team member (the observer) should look at the ballot and ensure that the correct name was read off and should watch the hash mark being made to ensure it is made in the correct row.

Step #14 - The reader then reads off the name of the candidate in the second office who received the vote on the ballot being counted, the marker should then make a hash mark on the tally sheet in the appropriate row, which is checked by the observer. Continue this process until the entire ballot has been marked on the tally sheet. Then proceed to the next ballot.

If a voter has not voted for any candidate for a particular office, the reader should state "undervote" and the marker should mark the "undervote" row for that office on the tally sheet.

If the voter voted for two or more candidates for an office where the ballot instructs to vote for one, the reader should read off "one overvote" and the marker should mark the "overvote" row on the tally sheet. If the instructions are that a voter should vote for two and the voter voted for three or more, the reader should read off "two overvotes."

Step #15 – When all 50 ballots have been marked on the tally sheet, the hash marks should first be totaled for each candidate including the write-ins, undervotes and overvotes and then for each office. The total votes for each office/question should equal 50. If they do not equal 50, go back through the pile and correct any counting/marking errors.

Step #16 - Bind the pile of ballots with the tally sheet on top with a rubber band or clip and notify the moderator that he or she can pick up that pile.

Step #17 – Start the process over with the next pile of 50 ballots.

Step #18. – The moderator should designate some election officer who routinely works with numbers, often the clerk, to tally the piles. Ideally a second election officer will assist and act as observer for this tallying process. Usually these individuals do not work on a counting team. As each team completes a pile of 50 ballots and has confirmed the accuracy of the count, the moderator can carry the pile to the team who will be tallying the piles.

Step #19. - When the last pile(s) have been counted and turned into the team that is tallying the piles the moderator should ensure that these officials have peace and quiet to finish the tallies. The tallying must occur in public. However, when all the election officers and counters gather at the tallying table and watch the final calculations, it puts pressure on those making the final calculations and makes errors more likely. The tallying team should tally the results for all elections. The use of a printing calculator allows the team or the moderator to check the printed tape as a means of ensuring the accuracy of the tally. The final tallies should be written down and presented to the moderator.

Step #20 – The moderator should stop before announcing the results and check the final tallies. If a count was done of the total number of persons checked off as having voted on the checklist the tallies for each office and question should be verified against that count. In towns or wards with thousands of ballots and thousands of voters checked off on the checklist, the moderator should be looking for any significant discrepancies between the totals. It is difficult to get a perfect count from the checklist, therefore, it is not essential that the total count for each office or question exactly match the vote totals. Provided the write-ins, undervotes and overvotes were tallied, the totals from one office to the next should be the same. If any discrepancies are found the moderator should investigate and attempt to resolve the discrepancy before declaring the results.

ELECTION TALLY SHEET (FOR READ-AND–MARK METHOD)

READ-AND-MARK (BALLOT-BY-BALLOT) Method: Replace "Candidate A" with the name of the first candidate listed on the ballot, "Candidate B" with the name of the second candidate, etc. Depending on the design of your ballot it may be practical to use sample ballots as tally sheet or to easily create a tally sheet by adding hash mark columns and total columns to one sample ballot and photocopying the quantity of tally sheets you will need.

Enter total number of ballots being counted _____

Governor	Hash Marks	Total
Candidate A		
Candidate B		
Candidate C		
Undervotes		
Overvotes		
Write-in		
Write-in		
Write-in		
Write-in		
OFFICE TOTAL – Must Equal Total Ballots being Counted		
US Senator	Hash Marks	Total
Candidate A		
Candidate B		
Candidate C		
Candidate D		
Undervotes		
Overvotes		
Write-in		
Write-in		
Write-in		
Write-in		
OFFICE TOTAL – Must Equal Total Ballots being Counted		
US Representative	Hash Marks	Total
Candidate A		
Candidate B		
Candidate C		
Candidate D		
Undervotes		
Overvotes		
Write-in		
Write-in		
Write-in		
OFFICE TOTAL – Must Equal Total Ballots being Counted		

MODERATOR'S WORKSHEET FOR THE 2014 GENERAL ELECTION

Reconciling Votes, Voters, and Ballots Cast

2014 GENERAL ELECTION

Moderators are required to submit this worksheet to their town or ward clerks within 48 hours of the closing of the polls (RSA 659:73). It is the moderator's job to ensure that votes are accurately counted (RSA 659:60).

Town or City: _____ Ward: _____ County: _____

Moderator: _____Clerk: _____

PART I.

The first part of the reconciliation process consists of ***four separate tallies***: (A) Ballots Cast (Inventory), (B) Voter Participation Tallied at Check-In, (C) Voter Participation Tallied at Check-Out/Ballots Cast Tape, and (D) Hand Count of Ballots Cast. Ideally, these ***four counts should result in the same number*** of ballots cast and voters participating (In the end, **TOTAL A = TOTAL B = TOTAL C = TOTAL D = TOTAL Count of Votes in Contests (from Part II)**). While we recognize that errors may occur which could result in small differences in the four Part I totals, Moderators are urged to ***carefully consider*** these tally numbers ***before finalizing results*** on election night.

A. BALLOT INVENTORY

(1) Official Election Day Ballots Received from Secretary of State, excluding ACCUVOTE device test ballots
(*You may enter this same number on the "**Moderator's Certificate**"*) (1) _____

(2) SUBTRACT Spoiled (cancelled) Official Election Day Ballots
(*You may enter this same number on the "**Label for Resealing Ballots**"*) - (2) _____

(3) SUBTRACT Uncast (not used) Official Election Day Ballots
(*You may enter this same number on the "**Label for Resealing Ballots**"*) - (3) _____

(4) ADD Ballots cast using AVS (Accessible Voting System) + (4) _____

(5) ADD Photocopy or absentee ballots **CAST** as Official Election Day Ballots + (5) _____
(These are the substitute ballots used when the polling place runs out of Election Day Ballots.)

(6)Total Number of Ballots Cast by ELECTION DAY voters *(Calculate 1 through 5)* = [ ]

(7) State Absentee Ballots Cast (7) _____

(8) ADD Federal Office Only Absentee Ballots Cast + (8) _____

(9) ADD other full (UOCAVA) Absentee Ballots Cast + (9) _____

(10) Total Number of Ballots Cast by ABSENTEE voters *(ADD 7, 8 and 9)* **=** [ ]

(11) Grand Total Number of Ballots Cast (Using Inventory)*(ADD boxes 6 + 10)* = **TOTAL A** [ ]
(You may enter this same number on the "***Label for Resealing Ballots***")

*You may transfer numbers from the "**Ballots Cast**" form*

B. VOTER PARTICIPATION TALLIED AT CHECK-IN

Number of voters ***marked as having voted*** on the ***CHECK-IN*** checklist
(ALL Election Day voters and ALL Absentee voters) = **TOTAL B** [ ]

C. VOTER PARTICIPATION TALLIED AT CHECK-OUT

HAND COUNT CITIES OR TOWNS	MACHINE COUNT CITIES OR TOWNS
OR	
Number of **voters** ***marked as having voted*** on the ***CHECK-OUT*** checklist *(ALL Election Day and ALL Absentee voters)* **TOTAL C =**	Total **Ballots** Cast from the ACCUVOTE election results tape _____ ADD Number of ballots that were NOT counted by the ACCUVOTE *(see Note below)* + _____ **TOTAL C =** *(Note: These ADDED ballots are ONLY those Ballots that were counted by hand and did NOT pass though the ACCUVOTE counting device. Do NOT include ballots simply because they had write-in votes.)*

D. HAND COUNT OF BALLOTS CAST

You may hand count the total number of **ballots cast.** **TOTAL D**

PART II. VOTES IN CONTESTS IN THE GENERAL ELECTION

Compare the ballots cast (**TOTALS A, B, C**, and **D)** from PART I of this form) with the total **votes** cast from the "**Votes in Contests*, Examination of Individual Races***". If there are any significant discrepancies, please ask your election team to carefully review their tallies.

It is important to ***resolve discrepancies on election night before announcing results*** and avoid errors which, for example, may indicate more votes tallied in a particular contest than total ballots cast.

TALLY CATEGORY	TOTAL Votes, Voters, or Ballots Cast
TOTAL A – Ballots Cast (Using Inventory) *(from Grand Total on reverse side)*	
TOTAL B -- Voters at Check-in *(from reverse side of this form)*	
TOTAL C -- Voters at Check-out/Ballots Cast Tape *(from this side of form)*	
TOTAL D – Hand Count of Ballots *(from this side of form)*	
TOTAL COUNT OF VOTES in CONTESTS *(transfer number from "**Votes in Contests - Examination of Individual Races**" that reflects the consensus "office total" for the individual contests.*	

These **five** numbers above **should all be equivalent.** Significant differences may indicate a tallying error.

Attest: _____ Date: _____

Signature of Moderator

VOTES IN CONTESTS								
Examination of Individual Races in the 2014 General Election								
Contests	Total Votes Cast for Candidate Printed on Ballot					Total Write-ins	Total Blanks*	Office Total
	REP	DEM	Other	Other				
Governor	Walt Havenstein	Maggie Hassan						
Votes cast								
U.S. Senate	Scott P. Brown	Jeanne Shaheen						
Votes cast								
U.S. Congress								
Votes cast								
Executive Councilor								
Votes cast								
State Senator								
Votes cast								
State Rep.								
Votes cast								
State Rep.								
Votes cast								
State Rep. (Floterial)								
Votes cast								

Contests	Total Votes Cast for Candidate Printed on Ballot					Total Write-ins	Total Blanks *	Office Total
	REP	DEM	Other	Other				
Sheriff								
Votes cast								
County Attorney								
Votes cast								
County Treasurer								
Votes cast								
Register of Deeds								
Votes cast								
Register of Probate								
Votes cast								
County Commissioner(s) **, District ___								
Votes cast								
County Commissioner(s) **, District ____								
Votes cast								

* Blanks = overvotes plus undervotes. Term "blanks" appears on the counting device tape report.

** County commissioners districts and elections vary by county.

RECOUNT PROCEDURES CHART

Type of Election	Petitions	To Whom and How Initiated	Application Deadline	Fees Minimum*	Who Shall Conduct
State General Election RSA 660:1-6 State Primary Election – Same RSA 660:7 – 9.	None Required	Secretary of State; Apply in Writing; In the general election, the difference between votes cast for the applying candidate and the candidate declared elected must be less than 20% of total votes in the towns which comprise the office to be recounted. RSA 660:1. In the state primary election, the difference between votes cast for the applying candidate and the candidate declared nominated must be less than 10 votes or less than 1.5 % of the total ballots cast in the primary for that party in the towns which comprise the office to be recounted. RSA 660:7. If difference in vote between candidate and winner is greater than 3%, candidate must pay the full expense of the recount. RSA 660:2, IV.	No later than the Friday following the State Primary Election and the Friday following the General Election	By Office: Governor $500 U.S. Senator $500 U.S. Representative $250 Executive Councilor $100 State Senator $50 County Officer $50 State Representative $10	Secretary of State
City Election (offices)	Consult City Charter				
Annual Town Meeting RSA 669:30-32.	None Required	Town Clerk; Apply in Writing	No later than Friday following the election	Vote difference between winner and candidate requesting is Less than 1% $10 Between 1 and 2% $20 Between 2 and 3% $40 Greater than 3% $40 plus costs of recount	Board of Recount (Clerk, Moderator, Selectmen) RSA 669:32.
Annual or Special Meeting – Any Referendum Question RSA 40:4-c	10 legal voters	Town Clerk; Apply in Writing	Within 7 days of meeting	$10	Board of Recount (Clerk, Moderator, Selectmen)
School Districts – Officers by Official Ballot RSA 671:32	Not Required	School District Clerk; Apply in Writing	No later than Friday following the election	$10	Board of Recount (School District Moderator, Clerk, School Board)
Constitutional Amendments RSA 660:10; RSA 660:11	100 voters if question passes or fails by 1%; no provision for recount if question passes or fails more than 1%	Secretary of State by petition	No later than the 4th Friday following the election.	None	Secretary of State
County Referendum RSA 660:12	50 voters of the county	Secretary of State by petition	No later than 2nd Friday following election	$25 paid by person by whom petition is submitted	Secretary of State
Local Questions on state ballot. (Sweepstakes, Liquor, etc.) RSA 660:13 – 15.	5 voters of city or town	Secretary of State by petition	No later than 2nd Friday following the election	$10 per 1000 votes, not to exceed $50.	Secretary of State

*Fees increase as vote difference between the applying candidate and candidate declared winner increases. RSA 660:2.

NEW VOTER AUTHORIZATION CARD

City/Town of _____

Authorization Card for New Voters

Instructions: Applicants for registration as a voter on election day must complete this form. Once your application to be registered as a voter has been approved, a Supervisor of the Checklist will sign this form. Take this form to the Voter Check-In table. A Ballot Clerk will add your name to the checklist and will issue you a ballot(s).

(For hand count towns only). The ballot clerk will hand this card back to you with the ballot. Keep it with you when you go to the voting booth to mark your ballot(s). When you are finished marking your ballots, fold the ballot so that your votes cannot be seen and go to the check-out table. Hand this form to the town clerk or a ballot clerk who will add your name to the checklist used to check voters out. Then take your ballot to the moderator who will be positioned by the ballot box. Hand the ballot to the moderator, who will drop it in the ballot box.

This card authorizes the addition of the person named herein to the checklist as a new voter who has registered on election day:

Date: _____

Print your name here:
_____

Print the physical address of your voting domicile:
_____

_____

If this is a Primary Election:
Print the name of the party you affiliate with:
_____

Sign the form:
_____

FOR OFFICIAL USE ONLY:

The person named above has been approved by the Supervisors of the Checklist as a new voter.

Signed _____-
(Supervisor of the Checklist)

STATE OF NEW HAMPSHIRE
NOMINATION PAPER

(For State General Election)
RSA 655:40 – 45

The subscriber, a registered voter in the State of New Hampshire, hereby makes the following nomination to be voted for at the state general election to be held on **November 4, 2014**, and requests that the name of said candidate be placed upon the official ballot to be used in said election as a candidate of the following Political Organization _____.

Candidate's Name _____

Candidate's Domicile _____
(street) (town or city) (ward) (zip)

For the Office of _____District No. _____

RSA 655:45

No person shall falsely make or file or knowingly deface or destroy any nomination paper, or any part thereof, or sign any nomination paper contrary to the provisions of law knowing the same, or any part thereof, to be falsely made or suppress any nomination paper, or any part thereof, which has been duly filed. Whoever knowingly violates any of the provisions of this section shall be guilty of a misdemeanor if a natural person or be guilty of a felony if any other person.

Voter's Signature _____ Date: _____

Print Voter's Name _____

Voter's Domicile _____
(street address) (town or city) (ward)

Voter's Mailing Address _____
(street address) (town or city) (ward)

CERTIFICATE OF SUPERVISORS OF THE CHECKLIST

The undersigned, a **MAJORITY** of the **SUPERVISORS OF THE CHECKLIST** (or Registrars of Voters), hereby certify

that the voter signing this nomination paper is a registered voter in the town/ward of _____

_____

_____

_____

☐ The signer of this paper is **NOT** a registered voter in this town or ward Date signed _____

RSA 655:41, II. The city clerk may certify that the signer is a registered voter, if in a city.

Filing Deadlines:
August 6, 2014 – Last day to submit signed nomination papers to Supervisors of the Checklist in town or city
August 27, 2014 5:00 p.m. – Supervisors must have nomination papers certified for candidates and organizations
September 3, 2014 5:00 p.m. – Last day to file certified nomination papers with Secretary of State's Office

UNDECLARED VOTERS
ELECTION DAY PARTY AFFILIATION CHANGE FORM

Name _____
(Print)

Address _____

_____

_____

I hereby request that my political party registration be changed as follows:

From: Democrat [ ] or Republican [ ]

To: Undeclared [ ]
Signed under the pains and penalties of perjury.

_____
SIGN NAME

DATE: _____

UNDECLARED RE-REGISTRATION PRIMARY DAY

(Undeclared voter uses this form to change party
affiliation back to undeclared after voting on primary day.)

Undeclared Voter Re-Registration - DIX'S GRANT

Page 1

Election Date-Name: 2014-12-25--TEST PRIMARY ELECTION

**"I hereby request that my political party be changed from Party Choice to Undeclared."
signed under the pains and penalties of perjury. (per RSA 654:34)**

Ward: 00

Name	Residence Address	Circle Party Chosen		Voter ID	Barcode	Signed under the pains and penalties of perjury
LASTNAME, FIRSTNAME, MIDDLENAME	1 NO ADDRESS DIX'S GRANT	DEM	REP	063000001		_____

POLLING PLACE LAYOUT EXAMPLE

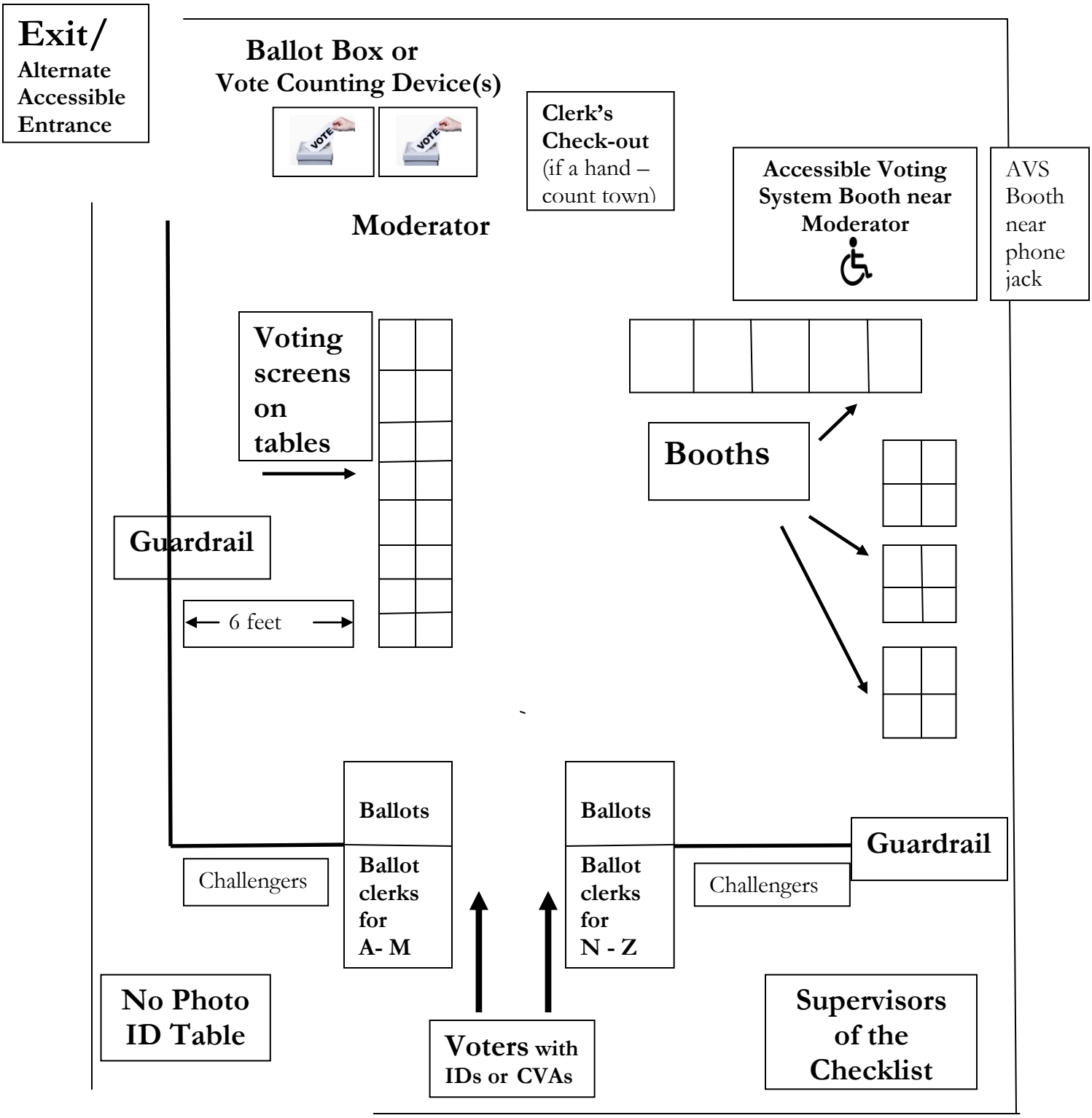

Must be 6 feet between guardrail and voting activities in all directions.
Alternate entrance for persons with disabilities must be clearly signed, with clear path to check-in table.
Challengers must be stationed within sight and sound of ballot clerks but outside guardrail.

Entrance

RETENTION AND PRESERVATION OF ELECTION MATERIAL

	Retained by	Period of Retention
Elections		
Federal elections: ballots, absentee ballot applications, affidavit envelopes, lists, and Challenged Voter Affidavits	City or Town Clerk (Unless requested by the Secretary of State – RSA 659:99)	until the contest is settled and all appeals have expired or at least 22 months after the election, whichever is longer
Not federal elections: ballots, absentee ballot applications, affidavit envelopes, and lists.	City or Town Clerk (Unless requested by the Secretary of State – RSA 659:99)	until the contest is settled and all appeals have expired or at least 60 days after the election, whichever is longer
Not federal elections: Challenged Voter Affidavits	City or Town Clerk (Unless requested by the Secretary of State – RSA 659:99)	until the contest is settled and all appeals have expired or at least 22 months after the election, whichever is longer
Checklist		
Marked copy	by the town clerk	7 years
Voter Registration		
Forms, including Page 2 of the Voter Registration Form and absentee voter registration forms	by the supervisors of the checklist	until voter is removed from checklist plus 7 years
Same day, returned to undeclared status, form and report from statewide centralized voter registration database	by the supervisors of the checklist	until voter is removed from checklist plus 7 years
Party change form	by the supervisors of the checklist	until voter is removed from checklist plus 7 years
Forms, rejected, including absentee voter registration forms, and denial notifications	by the supervisors of the checklist	7 years
Qualified Voter Affidavit	by the supervisors of the checklist	until voter is removed from checklist plus 7 years
Domicile Affidavit	by the supervisors of the checklist	until voter is removed from checklist plus 7 years
Overseas absentee registration affidavit	by the supervisors of the checklist	until voter is removed from checklist plus 7 years
Absentee ballot voter application form in the federal post card application format, for voters not previously on the checklist	by the supervisors of the checklist	until voter is removed from checklist plus 7 years
Absentee ballot affidavit envelope for federal post card applicants not previously on the checklist	by the supervisors of the checklist	until voter is removed from checklist plus 7 years
Notice of removal, 30-day notice	by the supervisors of the checklist	until voter is removed from checklist plus 7 years
Report of death	by the supervisors of the checklist	until voter is removed from checklist plus 7 years
Report of transfer	by the supervisors of the checklist	until voter is removed from checklist plus 7 years
Undeliverable mail or change of address notice from the United States Postal Service	by the supervisors of the checklist	until voter is removed from checklist plus 7 years

Types of Documentation Authorized by New Hampshire Law for Voter Registration and Election Day Check-In					
Documentation	**IDENTITY**	**AGE**	**CITIZEN-SHIP**	**DOMICILE**	**Election Day Check-In (2014)**
Photo driver's license or non-driver's license issued by any state	✓	✓ (if deemed reasonable by supervisors)			✓ (valid for 5 years beyond expiration date)
Photo driver's license or non-driver's license issued by the federal government	✓	✓ (if deemed reasonable by supervisors)			✓
Valid New Hampshire driver's license issued to or in the name of the applicant	✓	✓ (if deemed reasonable by supervisors)		✓ (must show the address the applicant claims as domicile)	✓ (valid for 5 years after expirations date)
United States passport (or passport card)	✓	✓ (if deemed reasonable by supervisors)	✓		✓ (valid for 5 years after expiration date)
Valid United States armed services identification	✓			✓ (must show the address the applicant claims as domicile)	✓
Naturalization papers if the applicant is a naturalized citizen			✓		
Valid New Hampshire vehicle registration issued to or in the name of the applicant				✓ (must show the address the applicant claims as domicile)	
Birth certificate		✓ (if deemed reasonable by supervisors)	✓		
Qualified Voter Affidavit, or applicable portion (identity, age, or citizenship) or Page 2 of the Voter Registration Form received in the General Election	✓	✓	✓		
Domicile Affidavit, or domicile portion of Page 2 of the Voter Registration Form received in the General Election				✓	
Challenged Voter Affidavit					✓
Any reasonable documentation to establish that he or she will be 18 years of age or older the next election		✓			
Photo identification deemed reasonable by supervisors of the checklist	✓				✓ (if deemed legitimate by the supervisors, moderator or clerk)
Any documentation deemed reasonable by the supervisors of the checklist			✓	✓	
Valid photo identification issued by the United States government	✓			✓ (must show the address the applicant claims as domicile)	✓
Photo identification card "for voting purposes only" issued by the NH DMV	✓				✓
Valid photo identification issued by state, county or municipal government	✓				✓
Valid student identification card	✓ (if deemed reasonable by supervisors)				✓ (if school is on list provided by the N.H. Dept. of Education)
Identity verified by supervisor of the checklist, moderator or town, city or ward clerk					✓

INDEX

A

Absentee ballot .8, 9, 18, 19, 20, 21, 22, 23, 38, 39, 43, 44, 45, 47, 49, 61, 62, 64, 66, 67, 68, 72, 73, 82, 83, 85, 98, 99, 100, 101, 102, 103, 105, 106, 107, 125, 132
Absentee voter 8, 17, 20, 21, 23, 38, 39, 86
Absence of official.....56
Absentee Ballot- Notice Of Requirements to Use.....133
Absentee Registration..... 83, 134, 135
Absentee voters, list 22
Accessibility.....27, 28, 110, 111, 112, 113, 115
Route from lot to voting booth 116
Walkway 116, 117
Accuvote 29, 41, 148
Additional polling place 28, 31, 60, 73, 112
Administrative complaint procedure 131
Affidavit envelope.....67, 125
Age of voter 4, 6, 13, 76
Alteration of party affiliation 3
Alternates 55, 59, 110
Appeals 75
Armed services..... 80, 83, 84, 99
Armed Services absentee voters..... 18, 83, 84, 85
Asserting a Challenge..... 22, 23, 36, 39, 66, 67, 73, 92, 123, 124, 125, 144, 147
Asserting a Challenge Form 26, 66, 144
Assuming office.....53, 109
Attorney General .....Preface, 63, 73, 111, 114, 123, 124, 126
Auditor 57, 107

B

Ballot box 26, 62, 67, 70, 73, 111, 166
Ballot clerks.....24, 25, 34, 59, 62, 63, 124
Ballot containers, inspect.....101
Ballot counting device 26, 29, 62, 63, 112, 148
Ballot Law Commission 54, 94, 112
Ballots, delivery of 29, 73
Ballots, counting 42
Board of Recount 49, 74, 75, 104, 108, 174
Board of Supervisors.....51, 52, 56, 88, 93, 94, 107, 147
Bond.....53
Booths.....110, 111

C

Campaign spending.....15
Challenge 7, 21, 36, 39, 66, 67, 83, 101, 105, 123, 124, 125
Challenged absentee voter 125, 144
Challenged Voter Affidavit..... 31, 32, 33, 34, 36, 61, 66, 92, 124, 143, 161, 180
Change party.....2, 88
Charter 51
Checklist..1, 2, 3, 7, 8, 9, 10, 18, 20, 21, 25, 26, 28, 31, 32, 34, 35, 36, 38, 39, 43, 45, 46, 48, 52, 61, 63, 67, 70, 73, 76, 77, 79, 80, 81, 86, 88, 89, 90, 91, 92, 93, 94, 95, 97, 98, 99, 101, 102, 104, 105, 106, 107, 123, 129, 147, 166, 168
Cities 51
Citizenship.....4, 6, 7, 10, 18, 26, 32, 46, 76, 77, 80, 81, 86, 91, 92, 114, 129
City clerk 51
City council.....51
Civil penalty.....129
Closing the polls.....69
Collector of taxes 57
Confidential information.....53
Conflict of interest 25
Correction of the checklist 94
Counting..... 40, 41, 70, 103, 114

D

Death, notice of 10, 87
Declaration of Candidacy 14, 15, 97
Declaration of intent, candidate 16
Delivery of ballots 104, 114
Democratic Party delegates.....15
Disqualified election officer 25
District court 55
Domicile 3, 4, 6, 7, 8, 10, 13, 14, 16, 18, 26, 32, 46, 47, 53, 76, 77, 78, 79, 80, 81, 82, 83, 84, 86, 91, 92, 97, 106, 114, 129, 132
Domicile Affidavit 6, 9, 80, 81, 83, 91, 92, 105, 142, 147, 179, 180
Domicile Affidavit Form 142

E

Election day registration 1
Election Forms and Documents Checklist 147
Election officers 51, 57, 60, 63, 73, 74, 78, 103, 114
Election officials 51
Electioneering 19, 25, 37, 114, 126, 127, 130
Public employees.....130
Electio*Net* 1, 2, 3, 6, 7, 9, 10, 11, 14, 23, 26, 36, 39, 76, 84, 86, 88, 89, 90, 92, 93, 95, 97, 99, 100, 105, 106, 124, 125, 131
Examination of Individual Races spreadsheet.....43, 172
Exhausted ballot supply 103
Extended hours voting 37

F

Federal Overseas Citizens 9, 18, 84, 136
Fees.....174
Fees, recount 107
Felons, incarcerated.....82
Filing period 87, 88, 97, 98, 106
Flag.....110

G

General election 2, 9, 16, 17, 20, 24, 27, 30, 45, 47, 51, 53, 59, 60, 61, 105

H

Help America Vote Act (HAVA) 21, 32, 40, 63, 67, 73, 103, 106, 113, 115
Highway agent 57
Home of record 84
Hospital..... 14, 79

I

Identity 3, 4, 5, 6, 7, 77, 79, 80, 81, 83, 132
Incarcerated felons..... 82
Incompatible offices 15, 57
Inspector of Elections 51, 57, 59, 110
Instructions to Voters 18
Intention of a voter..... 41

J

Justice of the peace 109

M

Misconduct, election official..... 131
Misdemeanor 64, 68, 105, 112
Moderator 51, 52, 55, 56, 57, 59, 60, 63, 65, 66, 67, 68, 69, 70, 72, 73, 74, 103, 107, 108, 109, 111, 114, 124, 125, 126
Moderator pro tempore 25
Moderator's Worksheet 43, 147
Motor voter law..... 8, 94

N

National Voter Registration Act..... 8, 94
Nomination paper 16, 89
Notice of removal 10
Notice to Voters of the State Primary Election..... 13, 97
Nursing homes..... 101

O

Oath of office.....52, 53, 59, 108, 138
Observers 74
Officer pro tempore..... 56
Out of ballots..... 103
Overseas voter..... 8, 83
Overvotes 41, 71, 163, 164, 165, 167, 168, 173

P

Party affiliation 7, 10, 11, 24, 33, 88, 97, 104, 105
Party change 90
Party committee 15, 17
Pasters 16
Penal institution 82
Physical disability..... 8, 16, 18, 19, 22, 47, 106, 115, 121, 134
Police 57
Political advertising..... 12
Political committees 55, 59
Polling hours 113
Postcard applications..... 23
Posting checklist 88
Posting of warrant..... 27, 112
Posting sample ballots 98
Preservation of challenges 125
Preservation of checklist 106
Presidential primary 2, 11, 13, 45, 88, 105
Primary election 2, 9, 11, 13, 14, 17, 20, 24, 30, 45, 49, 61, 87, 88, 91, 97, 98
Primary petition.....15, 97, 98
Privacy folder..... 35, 63
Protective order..... 9
Public information 7, 105, 126
Public record.....7, 45, 92, 106
Purity of Election Laws Poster 18, 147

Q

Qualified Voter Affidavit .4, 5, 6, 77, 80, 81, 83, 92, 141, 147, 179, 180
Qualified Voter Affidavit.Form 141

R

Rail.....63, 110, 111, 123, 126
Recommended Election Supplies 146
Recount 49, 52, 74, 105, 107, 108, 109, 174
Registration form.....86, 88, 91, 93, 105, 140
Registration, voter 1, 76, 97
Religious observance 18, 22
Removal of names, voter checklist 93
Report of voter transfer (move) 10
Reporting election results..... 71, 103
Representative, state..... 13
Republican State Convention 14, 97, 98
Resignation, officeholder..... 53
Retention and preservation of election material 179
Right-To-Know Law.....7, 104, 105

S

Sample ballots 17, 47, 48, 61, 98, 107, 147, 169
SB 2 30
School district meetings 59

Secretary of State.....Introduction, Preface, 3, 4, 8, 13, 14, 15, 16, 17, 18, 19, 20, 26, 27, 29, 30, 45, 61, 62, 71, 72, 74, 94, 97, 101, 103, 104, 105, 112, 113, 174, 179
Secure the ballots 114
Selectmen 24, 25, 26, 27, 28, 30, 31, 40, 44, 47, 49, 51, 52, 54, 55, 57, 59, 62, 70, 72, 73, 74, 107, 108, 109, 110, 111, 112, 113, 114, 115
Special meeting..... 107
Spoiled ballots..... 35, 65, 104
Statewide voter regisration database (See Electio*Net*) 1, 105
Student voters 14, 82
Superior Court..... 7, 53, 54, 55, 109
Supervisors..1, 2, 3, 4, 6, 10, 18, 28, 51, 54, 55, 57, 60, 77, 79, 80, 85, 86, 87, 88, 89, 90, 91, 93, 94, 97, 105, 129, 132

T

Temporarily absent, voter 8, 10, 14, 86
Test vote counting device 29, 148
Town Clerk ..1, 8, 11, 13, 14, 22, 25, 26, 28, 40, 43, 46, 47, 48, 49, 51, 52, 55, 56, 57, 59, 60, 70, 72, 73, 74, 89, 97, 101, 102, 103, 104, 106, 107, 108
Town Election Duties 46, 106
Town elections..... 2, 46, 47, 48, 106
Town manager 57, 58
Transfer (move by voter), notice of 93
Treasurer..... 57
Trustee of trust funds 57

U

Unaffiliated voter 11
Undervotes 41, 71, 163, 164, 165, 166, 167, 168, 173
Unused ballots 104

V

Vacancy 53
Verification of the checklist 94
Village district commissioner 57
Vote by mail 18
Voter Instructions 147
Voter Registration Form..... 89, 147
Voting booths..... 110, 111

W

Ward clerks 13, 51, 97, 180
Ward Officers 52
Warrant..... 13, 27, 69, 111, 112
Write-in absentee ballot 8
Wrongful voting 129

INDEX OF ELECTION LAW STATUTES

42 U.S.C. 1973 aa-6 ..... 35, 64
42 U.S.C. 1973ff-1 103
42 U.S.C. 1974 ..... 105, 179
HAVA Section 301 63
HAVA Section 703 ..... 21, 106
RSA 7: 6-c 131
RSA 7:46 9
RSA 15-A 15
RSA 31:39-a 25
RSA 31:41-c 19, 25, 126
RSA 32 57
RSA 33-A:3-a 9, 26, 36, 40, 44, 45, 67, 92, 105, 106, 108, 125
RSA 39: 3-d 47
RSA 39:3 ..... 47, 54, 110
RSA 40: 4-c 107
RSA 40: 4-d 107
RSA 40:1 51
RSA 40:13 ..... 2, 30
RSA 40:4 ..... 50, 60, 108, 174
RSA 41: 2-a 51
RSA 41: 3 ..... 52, 109
RSA 41: 8-b 47
RSA 41:16-a 51
RSA 41:26-b 51
RSA 41:45-a 47
RSA 41:45-c 55
RSA 41:46-a 1
RSA 41:8 ..... 47, 51
RSA 42: 1 ..... 52, 53, 54, 138
RSA 42: 2 52
RSA 42: 6 ..... 52, 53, 109
RSA 42: 8 109
RSA 44: 5 2
RSA 44:12 52
RSA 47:17 50
RSA 48: 2 51
RSA 49-B: 1 51
RSA 91-A 7, 89, 104, 105
RSA 155-A 113, 115, 116, 117, 118, 119
RSA 173-B: 4 9
RSA 273-A:1 ..... 127, 128
RSA 607-A: 2 ..... 20, 82
RSA 652: 1 131
RSA 652:12 ..... 53, 54
RSA 652:14 ..... 25, 31, 51, 52, 101
RSA 652:15 76
RSA 652:20 ..... 22, 100, 101
RSA 652:22 ..... iii, 119
RSA 653: 6 15
RSA 653: 7 30
RSA 653: 8 30
RSA 653: 9 30
RSA 653:10 53
RSA 654: 1 ..... 7, 13, 14, 54, 77, 78
RSA 654: 2 ..... 10, 14, 78, 82, 86
RSA 654: 3 ..... 7, 8, 19, 84
RSA 654: 4 19
RSA 654: 5 82
RSA 654: 6 ..... 77, 82
RSA 654: 7 ..... 1, 3, 26
RSA 654: 7-a 1, 18, 26
RSA 654: 8 ..... 1, 97
RSA 654: 9 1
RSA 654:11 ..... 7, 76
RSA 654:12 ..... 1, 3, 5, 6, 32, 46, 77, 79, 80, 81, 82, 90
RSA 654:13 ..... 7, 85
RSA 654:16 ..... 8, 83, 86
RSA 654:17 ..... 8, 83, 134, 135
RSA 654:18 8
RSA 654:19 8
RSA 654:20 8
RSA 654:21 8
RSA 654:22 8
RSA 654:23 8
RSA 654:25 ..... 7, 86
RSA 654:26 ..... 3, 88
RSA 654:27 ..... 2, 3, 88
RSA 654:28 ..... 2, 3, 88, 89, 94
RSA 654:29 ..... 3, 88
RSA 654:30 93
RSA 654:31 ..... 7, 9, 90, 105
RSA 654:31-a 7
RSA 654:32 ..... 2, 11, 88
RSA 654:33 ..... 3, 88
RSA 654:34 ..... 11, 26, 33, 36, 87, 91, 97
RSA 654:36 ..... 10, 86, 93, 94, 95
RSA 654:36-b 10, 86, 93
RSA 654:37 ..... 10, 86
RSA 654:38 ..... 93, 94
RSA 654:39 ..... 93, 94
RSA 654:42 ..... 7, 95
RSA 654:44 ..... 10, 86, 93
RSA 654:45 ..... 1, 105

RSA 655: 2 82
RSA 655: 8 13
RSA 655:10 ..... 15, 16
RSA 655:11 ..... 13, 97
RSA 655:12 ..... 13, 97
RSA 655:14 ..... 14, 16, 107
RSA 655:15 ..... 14, 97
RSA 655:17 ..... 14, 16
RSA 655:18 ..... 14, 97
RSA 655:21 15
RSA 655:22 15
RSA 655:23 15
RSA 655:24 15
RSA 655:25 15
RSA 655:26 ..... 15, 98
RSA 655:27 14
RSA 655:32 15
RSA 655:33 16
RSA 655:34 16
RSA 655:38 ..... 16, 17
RSA 655:39 17
RSA 655:40 16
RSA 655:41 ..... 17, 89
RSA 655:42 17
RSA 655:43 17
RSA 655:47 2
RSA 655:81 112
RSA 656: 1 17
RSA 656:18 ..... 17, 98, 107
RSA 656:19 17
RSA 656:20 ..... 29, 101
RSA 656:21 16
RSA 656:22 ..... 29, 101
RSA 656:26 17
RSA 656:28 ..... 17, 98
RSA 656:29 ..... 29, 101
RSA 656:33 18
RSA 656:38 18
RSA 656:40 ..... 26, 112
RSA 656:41 112
RSA 656:42 ..... 61, 112
RSA 657 ..... 9, 18, 19, 20, 85, 98, 99, 103
RSA 657: 1 ..... 18, 19
RSA 657: 6 ..... 20, 98
RSA 657: 7 133
RSA 657:10-a 9
RSA 657:15 ..... 22, 99
RSA 657:16 ..... 21, 99
RSA 657:17 100
RSA 657:18 100
RSA 657:19 ..... 23, 24, 28, 84, 85, 97, 98, 99, 107
RSA 657:19-a 23
RSA 657:19-c 24
RSA 657:21-a 20
RSA 657:22 ..... 22, 100, 103, 106
RSA 657:23 103
RSA 657:24 133
RSA 658: 1 ..... 27, 112
RSA 658: 2 ..... 24, 51, 55, 59, 60, 110
RSA 658: 3 ..... 57, 59
RSA 658: 4 ..... 57, 59, 110
RSA 658: 5 ..... 55, 59, 110
RSA 658: 6 55
RSA 658: 7-a 24
RSA 658: 8 26
RSA 658: 9.... 26, 27, 28, 110, 111, 112, 113, 115, 116, 117, 118, 119
RSA 658: 9-a 113
RSA 658:10 28
RSA 658:11 ..... 28, 60
RSA 658:12 ..... 28, 89
RSA 658:14 28
RSA 658:15 28
RSA 658:16 31
RSA 658:18 28
RSA 658:19 ..... 25, 54, 56, 60
RSA 658:20 ..... 25, 56
RSA 658:21 ..... 25, 56, 60
RSA 658:22 ..... 25, 55, 57, 110
RSA 658:23 ..... 26, 56, 114
RSA 658:24 ..... 25, 26, 40, 54, 56, 114
RSA 658:25 ..... 24, 25, 59, 63
RSA 658:26 ..... 17, 61, 98
RSA 658:28 60
RSA 658:29 ..... 61, 98
RSA 658:30 62
RSA 658:33 31
RSA 658:35 103
RSA 659: 3 114
RSA 659: 4 ..... 30, 114
RSA 659: 4-a 30, 114
RSA 659: 6 114
RSA 659: 8 114
RSA 659: 9 ..... 24, 31, 60, 63, 101, 114, 126
RSA 659: 10 90
RSA 659: 12 34
RSA 659: 13 ..... 1, 24, 34, 95
RSA 659: 15 ..... 31, 35, 64
RSA 659: 16 64
RSA 659: 20 ..... 25, 59, 64, 65, 102, 139
RSA 659: 21 64
RSA 659: 22 ..... 35, 65
RSA 659: 23 ..... 35, 36, 102
RSA 659: 24 ..... 68, 103
RSA 659: 25 35
RSA 659: 26 ..... 36, 37, 69
RSA 659: 27 ..... 36, 66, 123, 124
RSA 659: 30 ..... 80, 124

RSA 659: 34 ..... 73, 129, 134, 135
RSA 659: 35 64
RSA 659: 36 68
RSA 659: 38 64
RSA 659: 42 112
RSA 659: 43 ..... 37, 63, 126, 127
RSA 659: 44 ..... 37, 63, 126, 127
RSA 659: 45 ..... 73, 124
RSA 659: 46 ..... 36, 66
RSA 659: 48 23
RSA 659: 49 ..... 38, 62, 66, 67, 73
RSA 659: 49-b 38
RSA 659: 50 ..... 38, 67
RSA 659: 51 ..... 40, 67, 125
RSA 659: 52 ..... 40, 67
RSA 659: 53 ..... 40, 67
RSA 659: 54 68
RSA 659: 56 70
RSA 659: 58 ..... 40, 63, 114
RSA 659: 59 ..... 40, 41, 70, 73
RSA 659: 60 ..... 37, 40, 70, 103, 166
RSA 659: 61 70
RSA 659: 62 41
RSA 659: 63 37
RSA 659: 64 ..... 41, 42, 75, 167
RSA 659: 65 ..... 16, 42
RSA 659: 67 42
RSA 659: 69 42
RSA 659: 75 ..... 43, 72, 104
RSA 659: 82 71
RSA 659: 84 45
RSA 659: 89 45
RSA 659: 96 104
RSA 659: 97 ..... 44, 72, 114
RSA 659: 98 ..... 44, 73, 104, 114
RSA 659:102 ..... 7, 45, 92, 106
RSA 659:27-a 124, 125, 144
RSA 659:9-a 52
RSA 660:16 104
RSA 662: 6 14
RSA 664: 1 12
RSA 664: 5-a 15
RSA 664:14 12
RSA 664:17 12
RSA 664:18 131
RSA 666: 1 ..... 98, 131
RSA 666: 2 131
RSA 666: 3 ..... 70, 131, 166
RSA 666: 4 ..... 36, 66, 123
RSA 666: 5 ..... 36, 66, 123
RSA 666: 7-a 130
RSA 666: 8 131
RSA 666:14 131
RSA 669: 1 30
RSA 669: 2 ..... 27, 47, 112
RSA 669: 5 ..... 2, 88
RSA 669: 6 54
RSA 669: 7 57
RSA 669: 8 58
RSA 669: 9 ..... 53, 138
RSA 669:10 ..... 46, 52, 106, 109
RSA 669:11 46
RSA 669:12 46
RSA 669:13 46
RSA 669:14 46
RSA 669:17-a 46
RSA 669:18 46
RSA 669:19 46
RSA 669:21 106
RSA 669:22 ..... 47, 106
RSA 669:24 48
RSA 669:25 ..... 30, 47, 114
RSA 669:26 ..... 47, 106
RSA 669:29 ..... 47, 106
RSA 669:30 ..... 49, 50, 107, 108, 174
RSA 669:31 ..... 49, 50, 107, 108, 176
RSA 669:32 ..... 49, 50, 74, 108, 174
RSA 669:35 107
RSA 669:36 104
RSA 669:37 46
RSA 669:42 46
RSA 669:45 114
RSA 669:49 46
RSA 669:51 46
RSA 669:52 46
RSA 669:61 ..... 54, 55
RSA 669:62 55
RSA 669:63 55
RSA 669:64 ..... 55, 60
RSA 669:65 55
RSA 669:66 55
RSA 669:73 54
RSA 669:74 54
RSA 669:75 54
RSA 670: 3 ..... 2, 88
RSA 671: 5 88
RSA 671:16 25
RSA 671:28 59
RSA 671:32 ..... 50, 74, 174

New Hampshire Constitutional Provisions

Part 1, Article 11 ..... 20, 64, 82, 102, 113
Part 1, Article 39 51
Part 2, Article 14 13
Part 2, Article 32 ..... 60, 63, 110, 114, 126
Part 2, Article 84 52